Village of South Elgin

Engineering Design & Inspection

Policy Manual

ADOPTED: By Ordinance #2014-24 on June 16, 2014

ENGINEERING DESIGN & INSPECTION POLICY MANUAL
TABLE OF CONTENTS

INTRODUCTION

SECTION I. SANITARY SEWER SYSTEM

A. DESIGN REQUIREMENTS
B. MATERIALS

SECTION II. STORM SEWER SYSTEM

A. DESIGN REQUIREMENTS
B. MATERIALS

SECTION III. STORM WATER MANAGEMENT / SITE GRADING

A. DESIGN RESTRICTIONS
B. DESIGN REQUIREMENTS
C. MATERIALS

SECTION IV. WATER SYSTEM

A. DESIGN RESTRICTIONS
B. DESIGN REQUIREMENTS
C. MATERIALS

SECTION V. PAVEMENT / ROADWAYS

A. DESIGN REQUIREMENTS

SECTION VI. STREET LIGHTING

SECTION VII. DESIGN REFERENCES

SECTION VIII. INSPECTION PROCEDURES

A. STORM AND SANITARY
B. WATER DISTRIBTUION SYSTEM
C. PAVEMENT AND ROADWAYS

SECTION IX. ENGINEERING DETAILS

INTRODUCTION

The Village of South Elgin takes great pride in providing clear communication to the business community regarding Village guidelines. The following guidance document is intended to provide an easy reference for engineers, consultants, and developers performing business in the Village.

The standards provided in this document also support consistent standards when building within the Village right-of-way. Although intended to be as comprehensive as possible, the reader of this document should not expect every plausible design instance to be included.

The Village of South Elgin continuously updates this manual to reflect best available design practices.

Steven Super, Village Administrator

Richard A. Gallas, P.E., Director of Public Works

Marc McLaughlin, Community Development Coordinator

SECTION I

SANITARY SEWER SYSTEM

A. DESIGN REQUIREMENTS
B. MATERIALS

SANITARY SEWER REQUIREMENTS

A. Sanitary Design Requirements:

1. **Auger:** Augering will be required at all roadway crossings unless otherwise permitted by the Village of South Elgin Public Works Department. Steel casing and "Cascade" spacers (or approved equal) shall be utilized. In most installations, the casing shall be filled with pea gravel or sand, and the ends shall be blocked and mortared shut (refer to Village Casing Pipe Detail). Depending on the application, the Public Works Director may exclude the sand fill.

2. **Cover Depth:** All sanitary sewer and services must have a minimum cover of 4'.

3. **Calculations:** Provide calculations to substantiate the available capacity of the Village receiving sewer.

4. **Drop Connections:** Exterior drop connections will be permitted only where site conditions are not conducive for an elevation drop of less than 1'. Interior drop connections will not be permitted (refer to Village Drop Manhole Detail(s)).

5. **Manhole Spacing:** Manholes shall be provided at:

    - 300' minimum intervals
    - Change in pipe diameter
    - Change in pipe material
    - Change in grade
    - Change in horizontal alignment

6. **Manhole Sizing:** Sanitary sewer manholes shall have a minimum inside diameter of 4' (refer to Village Sanitary Manhole Detail).

7. **Separation Requirements:** A minimum of 10' horizontal separation shall be established between the sewer and any proposed or existing water distribution facility, or the invert of the water main shall lie a minimum of 18" above the top of the sewer pipe. Where neither of the above conditions can be met, the water main shall be encased for the duration of the horizontal conflict (10' on each side of a perpendicular conflict), or the sewer shall be constructed of water main quality materials for the duration of the conflict (10' on each side of a perpendicular conflict).

8. **Services, Domestic:** Domestic sanitary services shall be constructed of PVC SDR 26 or C900 with a minimum diameter of 6". All services will comply with all applicable Illinois Plumbing Codes. All domestic services shall connect to the public sewer with a wye fitting. A cleanout shall be installed within 10' of the structure.

a. A full size cleanout is required both 5' inside and within 5' outside of the foundation wall.
b. Waste piping below grade shall discharge to a sealed and vented ejector pit and be pumped to an overhead sewer.
c. The minimum underground waste pipe size shall be 6"**.**
d. The minimum underground vent piping size shall be 2".

9. **Services, Industrial & Commercial:** Industrial and commercial sanitary services shall be constructed of PVC SDR 26 or 21 or C900 with a minimum diameter of 6". All services will comply with applicable Illinois Plumbing Codes. All industrial and commercial services shall connect to the public sewer at a manhole, and an inspection manhole shall be provided within 10' of the structure (refer to manhole Sanitary Sewer Service Connection).

10. **Sewer Pipe, Materials (gravity):** Sanitary sewer shall be constructed of the following materials:

    i) Depth less than 16': PVC SDR 26 or C900 or Ductile Iron Pipe, Class 52 (ceramic lined).
    ii) Depth greater than 16': PVC SDR 21 or C900 or Ductile Iron Pipe, (ceramic lined) (class to be specified by depth, and manufacturer's specifications).

11. **Sewer Pipe, Minimum Size (gravity):** Public sewer may have a minimum diameter of 8", and must provide a minimum self-cleaning flow velocity to the Village of two (2) fps.

12. **Force Main:** Sanitary sewer force main shall conform to the following:

    i) 4" minimum diameter.
    ii) Ductile Iron Pipe, Class 52 (ceramic lined) or PVC SDR 21 or C900, with Poly-wrapping.
    iii) Clean-outs at all vertical and/or horizontal bends, or at 700' minimum intervals in a manhole. Clean-outs will be installed via the use of a "T" connection with a cap at the top of the clean-out.
    iv) Minimum flow velocity for the Village of two (2) fps.
    v) Air release valve shall be located at the high point of the force main.

13. **Trench Backfill:** All utility and service trenches within 3' of paved surfaces, or at a distance specified by the Public Works Director, shall be backfilled with CA-7 (Virgin Crushed Limestone, as defined by Bluff City). All backfill material shall be properly compacted unless otherwise directed by the Public Works Department. Provide a minimum thickness of 4" of pipe bedding under the pipe and a minimum thickness of 12" of covering over the top of pipe. Backfill under existing pavements, where an

open cut of the pavement has been approved, shall be Flowable Fill that meets the IDOT standards of Controlled Low Strength Material (CLSM) Mixture #1. No fly ash will be permitted in this mix (refer to Village Pipe Trench Details).

14. **Lift Station:** Lift stations will be permitted only where site conditions do not allow for the construction of a functional gravity sewage collection system. Where lift stations are permitted, the following criteria shall be met:

    i) A lift station design report shall be submitted for review *(Contact the Village of South Elgin Public Works Department).*
    ii) A complete set of shop drawings and product specification information (i.e.: generator, pump, lift station) shall be provided to the Village for review.
    iii) A detailed plan depicting the proposed layout of the lift station, including the location of the generator, control panel, wet and dry wells, access drive, and fencing, lighting, and landscape features shall be submitted for review.
    iv) A natural gas powered emergency generator shall be provided.
    v) A communication connection to the main Sewage Treatment Plant alarm system shall be provided.
    vi) A dedicated lot and access drive shall be provided to the Village.
    vii) All lift stations will be subject to the Planning and Zoning design review.
    viii) All lift stations will have a Muffin Monster.

15. **Extension of Sewer System:** Sanitary sewer system must be extended as a minimum, to the limit of the development at a minimum slope for self-cleaning velocity Village. Note on plans which sewer lines are to be public and private. Sanitary sewers shall be designed to accept all existing and future demand, based on the fully developed state under present zoning and the Village of South Elgin Comprehensive Plan.

16. **Disconnection of Existing Services:** Disconnection of existing services at their respective mains shall be by means of cutting out existing wye or tee and replacing with a straight piece of equal size pipe and making the final connection with a "Cascade" "non-shear" mission couplings. Disconnection of all services must be performed prior to the demolition of an existing structure. Existing services to be abandoned shall be filled or removed unless existing wye is approved by the Director of Public Works.

17. **Connecting to an Existing Sewer:** When connecting to an existing sewer main by means other than an existing "Y", "T", or an existing manhole, one of the following methods shall be used:

i) Using pipe cutter, neatly and accurately cut out desired length of pipe for insertion of proper fittings. Use "band-seal" couplings or similar couplings, and non-shear rings and clamps to fasten the inserted fittings and hold it firmly in place. Mission couplings shall have the length of boot approximately equal to the pipe diameter. Follow manufacturer's recommendations for the installation. No cut-in connection, made by breaking or cutting a hole in the main and inserting the spigot end of an ordinary sewer pipe shall be permitted.

ii) Circular, saw-cut of sewer main with proper tools ("Shewer-tap" machine or similar) and proper installation of hub-"Y" saddle or hub-"T" saddle, in accordance with manufacturer's recommendations. This method shall only be allowed for pipe sizes over 12" in diameter. All must be encased in concrete flowable fill.

18. **Structures Located Within the Floodplain:** Sanitary sewer manholes constructed on the floodplain must have a rim 2' above the base flood elevation (except for 3' within the floodplain of the Fox River) or have a water-tight lock type frame and cover, Neenah R-1916 C or approved equal.

19. **Video Note on All Plans:** Engineering plans must contain the following note: "A current color video record and a type written transcription of the internal inspection of the newly constructed sewer system shall be submitted prior to refunding of site improvement surety or letter of credit by the Village of South Elgin. All public mains shall be videotaped. The contractor must rotate the lens of the camera to look at all services. The service connections must be noted in the television report. When the proposed sanitary sewer system is to connect to an existing sanitary sewer system abutting the property, the existing sewer must also be televised and reported. The contractor shall coordinate the televising of existing contiguous sewers with the Village of South Elgin. All lines shall be flushed and cleaned prior to videotaping."

20. **GIS/GPS Standards:** All work will conform to the Village's GIS/GPS Standards found in Section VIII-*Inspection Procedures* of this manual.

21. **Connecting to an Existing Structure:** Pipe penetrations into existing sanitary manholes shall be properly sized and cored and sealed with flexible watertight connections (refer to Village Sanitary Sewer Connection Detail).

22. **Separation Requirements:** Sanitary and storm sewer utility services shall be separated by a minimum 10' of horizontal separation.

23. **Other Requirements:** Contractors or developers must meet all Fox River Water Reclamation District (FRWRD) requirements.

24. **Typical Sanitary Details:** Included in Section IX-*Engineering Details* for reference.

B. Sanitary Material Requirements:

1. **Drop Connections:** Drop connections shall be constructed of Ductile Iron Pipe, Class 52 (ceramic lined) or PVC SDR 26 or C900, per manufactures specifications. All drop manhole piping shall be encased in concrete (refer to Standard Drop Manhole Detail).

2. **Frame & Lid:** Frame: *Neenah R-1713 or R-1916C in Floodplain*
   Lid: *Neenah R-1713 or R-1916C type "B" with the words "Village of South Elgin - SANITARY" cast into surface*

3. **Joints:** All joints shall conform to ASTM D-3212 for PVC pipe and ASTM A-746 for ductile iron. Both pipe types shall be joined by means of a flexible gasket. Gaskets for PVC joints shall be in conformance with ASTM A 21.11-79 (AWWA C111).

4. **Manhole:** New sanitary manholes are to be precast reinforced concrete eccentric type with a minimum 48" I.D. barrel section; Cone sections shall have a 3" integrally cast precast concrete collar; Pipe penetrations are to be sealed via the use of a cast in place flexible synthetic rubber pipe sleeve which is to be fastened to the pipe with two stainless steel bands. Barrel sections shall be sealed using two (2) butyl rubber strips per tongue and groove section. Chimney seals are to be external type, manufactured by "Cretex" or approved equal by the Public Works Department. All new or adjusted steps shall be made of steel reinforced plastic, using an approved plastic meeting ASTM D4101, Type II, Grade 49108 over a #3 Grade 60, ASTM A615, and reinforcing bar. A maximum of 8" of adjusting rings shall be used (refer to Standard Sanitary Manhole Detail).

5. **Services:** Sanitary services shall be constructed for all build-able lots. Services shall be constructed of PVC SDR 26 or C900, 6" minimum diameter, and shall be extended to the rights-of-way limits. All connections to the public main shall be at a manhole or at a "wye" fitting approved by the Public Works Department. Once installed all services extending to the Village right-of-way limits shall be located utilizing a 4" x 4" treated wooden post painted red.

6. **Sewer Pipe, Materials:** Sanitary sewer shall be constructed of the following materials:

   - Depth less than 16': PVC SDR 26 or C900 or Ductile Iron Pipe, Class 52 (ceramic lined)

- Depth greater than 16': Ductile Iron Pipe, Class 52 (ceramic lined) or PVC SDR 21 or C900
- Force Main: Ductile Iron Pipe, Class 52 (ceramic lined) or PVC SDR 21 or C900

7. **Thrust Blocks (force main):** Thrust blocking shall be a combination pre-cast masonry blocks and *"Mega-lug"* brand restraints.

8. **Trench Backfill:** All utility and service trenches within 3' of paved surfaces, or at a distance specified by the Public Works Director, shall be backfilled with CA-7 (Virgin Crushed Limestone as defined by Bluff City). All Backfill material shall be properly compacted unless otherwise directed by the Public Works Department. Provide a minimum thickness of 4" of pipe bedding under the pipe and a minimum thickness of 12" of covering over the top of pipe. Backfill under existing pavements, where an open cut of the pavement has been approved, shall be Flowable Fill that meets the IDOT standards of Controlled Low Strength Material (CLSM) Mixture #1. No fly ash will be permitted in this mix (refer to Village Pipe Trench Detail).

SECTION II

STORM SEWER SYSTEM

A. DESIGN REQUIREMENTS
B. MATERIALS

STORM SEWER REQUIREMENTS

A. Storm Sewer Design Requirements:

1. **Auger:** Augering will be required at all roadway crossings unless otherwise permitted by the Village of South Elgin Public Works Department. Steel casing and "Cascade" spacers (or approved equal) shall be utilized. Following completion of the auger, the casing shall be filled with pea gravel or sand, and the ends shall be blocked and mortared shut (refer to Village Casing Pipe Detail).

2. **Catch Basins:** Catch basins shall consist of 4' minimum interior diameter reinforced concrete structures with a 3' sump (refer to Restrictor Structure Detail).

3. **Cover Depth:** All storm sewer and sump lines must have a minimum cover of 2'.

4. **Video Note on All Plans:** Engineering plans must contain the following note: "A current color video record and a type written transcription of the internal inspection of the newly constructed sewer system shall be submitted prior to refunding of site improvement surety or letter of credit by the Village of South Elgin. All public mains shall be videotaped. The contractor must rotate the lens of the camera to look at all services. The service connections must be noted in the television report. When the proposed storm sewer system is to connect to an existing storm sewer system abutting the property, the existing sewer must also be televised and reported. The contractor shall coordinate the televising of existing contiguous sewers with the Village of South Elgin. All lines shall be flushed and cleaned prior to videotaping."

5. **GIS/GPS Standards:** All work will conform to the Village's GIS/GPS Standards found in Section VIII-*Inspection Procedures* of this manual.

6. **Disconnection of Existing Services:** Shall be by means of cutting out existing "wye" or tee and replacing with a straight piece of equal size pipe and making the final connection with "non-shear" mission couplings. Disconnection of all services must be performed prior to the demolition of an existing structure.

7. **Flared End Sections:** All flared end sections greater than or equal to 12" that will receive or discharge storm water, shall have a removable grate system to prevent entry. This grate system shall be made from steel stock that is hot-dipped galvanized after fabrication.

8. **Extension of Sewer System:** The storm sewer must be extended to the limits of the subdivision or lot and must be sized to accept all tributary areas.

9. **Village Capacity Calculations:** Provide calculations to substantiate the available capacity of the existing Village receiving storm sewer/stream in light of the design discharge from the proposed development. Note on all plans which sewer lines are to be public and private. All proposed storm sewer systems shall be designed for a 10-year storm event per the Kane County Storm Water Ordinance as adopted and modified by the Village of South Elgin.

10. **Connecting to an Existing Sewer:** When connecting to an existing sewer main by means other than an existing "Y", "T", or an existing manhole, one of the following methods shall be used:

    a. Using pipe cutter, neatly and accurately cut out desired length of pipe for insertion of proper fittings. Use "band-seal" couplings or similar couplings, and shear rings and clamps to fasten the inserted fittings and hold it firmly in place. Mission couplings shall have the length of boot approximately equal to the pipe diameter. Follow manufacturer's recommendations for the installation. No cut-in connection, made by breaking or cutting a hole in the main and inserting the spigot end of an ordinary sewer pipe shall be permitted.

    b. Circular, saw-cut of sewer main with proper tools ("Shewer-tap" machine or similar) and proper installation of hub-"Y" saddle or hub-"T" saddle, in accordance with manufacturer's recommendations. This method shall only be allowed for pipe sizes over 12" in diameter. All must be encased in concrete flowable fill.

11. **Frame & Grate:** Frames and grates shall be provided as appropriate for the structure location (i.e.: depressed curb, barrier curb, overflow route, rear yard). All grates to be located near a paved surface shall be "bicycle safe". Calculations may be required to demonstrate that the proposed grates allow for an inflow that does not exceed the design capacity for the downstream pipe (refer to Standard Manhole Cover).

12. **Inlets:** Inlets shall consist of a 2' minimum interior diameter reinforced concrete structure. Inlets shall be placed at the sag of vertical curves in roadways, at low points in parking areas, and at other locations as necessary to minimize storm water ponding and/or flow across roadways or intersections. Storm sewer inlets shall be placed not more than 500' in pavement and shall not exceed 250' apart in grassy areas.

13. **Release Structure / Restrictor:** The release structure shall be of a weir wall orifice design (refer to Overflow Weir Structure Detail) or as approved by the Village of South Elgin.

14. **Underground Storage System:**

    a. Underground chambers must be large enough to allow the chamber to be manually cleaned.

    b. Access points for ingress and ventilation purposes are to be provided in the chamber at a maximum spacing of 100' and at the ends of the chamber.

    c. Underground storage chambers are to be clearly labeled on the engineering plans as "Private Storm Water Storage Facility." These chambers are to be maintained by the developer until an owners association has been established.

    d. Poured in place reinforced concrete chamber designs must be signed and sealed by an Illinois Licensed Structural Engineer.

    e. All reinforcement steel shall be epoxy coated and all concrete shall be treated with a protective concrete coating, on the interior and exterior of the chamber.

    f. For precast concrete construction, geo-textile fabric must be placed over the top of the structure, and all joints must be grouted.

    g. All structural steel members used shall be Corten or hot dipped galvanized. All connections shall have a like treatment.

    h. A minimum of 12" of topsoil plus sod must be placed to cover the underground storage facility when constructed under pervious surface.

15. **Separation Requirements:** A minimum 10' horizontal separation shall be established between the sewer and any proposed or existing water distribution facility, or the invert of the water main shall lie a minimum of 18" above the top of the sewer pipe. Where neither of the above conditions can be met, the water main shall be encased for the duration of the horizontal conflict (10' on each side of a perpendicular conflict), or the sewer shall be constructed of water main quality materials the duration of the conflict (10' on each side of a perpendicular conflict).

16. **Sewer Pipe, Minimum Size:** Public sewer shall have a minimum diameter of 10" for the first "run" of pipe, 12" minimum for all other.

17. **Slope:** Slope shall be adequate to provide a minimum flow velocity of three (3) fps and maximum acceptable velocity of ten (10) fps.

18. **Structure Sizing:** Manholes and catch basins shall have a minimum inside diameter of 4' for sewer pipe 18" or less in diameter, 5' for sewer pipe 21" to 48" in diameter. Pipes larger than 48" in diameter will require a special design (refer to Standard Manhole and Catch Basin Details).

19. **Structure Spacing:** Manholes / Catch basins shall be provided at:

    - 300' minimum intervals.
    - Change in pipe diameter.
    - Change in pipe material.
    - Change in vertical alignment.
    - Change in horizontal alignment.

20. **Existing Home Sump Lines:** Domestic sump services shall be constructed of PVC SDR 26 or C900 with a minimum diameter of 4". All domestic services shall connect to the public sewer by removing a section of main and installing a new "wye" fitting for pipes less than 15" in diameter, "Kor-N-Tee" Boots for pipes 15" and larger, or at a structure (refer to Connection Detail).

21. **Trench Backfill:** All utility and service trenches within 3' of paved surfaces, or at a distance specified by the Public Works Director, shall be backfilled with CA-7 (Virgin Crushed Limestone, as defined by Bluff City). All Backfill material shall be properly compacted unless otherwise directed by the Public Works Director. Provide a minimum thickness of 4" of pipe bedding under the pipe and a minimum thickness of 6" of covering over the top of pipe. Backfill under existing pavements, where an open cut of the pavement has been approved, shall be Flowable Fill that meets the IDOT standards of Controlled Low Strength Material (CLSM) Mixture #1. No fly ash will be permitted in this mix (refer to Village Pipe Trench Detail).

22. **Underdrains:** Underdrains will be required under curbs at the bottom of all roadway sags. Underdrains shall extend 50' on each side of the inlet. Underdrains shall be perforated polyethylene pipe. The underdrain shall be encased in gravel trench CA-7 (Virgin Crushed Limestone, as defined by Bluff City) with no fines, and a geotextile fabric shall be used to limit sedimentation in the pipe (refer to Standard Pipe Underdrain Detail).

23. **New Home Sump Lines:** Storm services shall be constructed for all buildable lots. Services shall be constructed of PVC SDR 26 or C900 with tracer wire pipe, 6" minimum diameter, and shall be extended to the rights-of-way limits. All connections to the public main shall be at a manhole or at a "wye" fitting approved by the Public Works Department. Once installed all services extending to the Village right-of-way limits shall be located utilizing a 4" x 4" treated wooden post painted green.

24. **Culverts:** Culvert pipe designs shall be in accordance with the Illinois Department of Transportation "Standard Specification for Road and Bridge Construction" latest edition. Publicly owned culvert pipes shall be PVC SDR 26 for pipes less than 12" in diameter or RCP for pipes equal to 12" or larger in diameter.

25. **Storm Details:** Typical storm details can be found in Section IX-*Engineering Details.*

B. Storm Sewer Materials:

1. **Casing:** Where water main protection is required, encasement shall consist of PVC SDR 26 or C900 with tracer wire, or steel casing with *"Cascade type CCR-STD"* spacers or approved equal.

2. **Frame & Grate:**

Curb Inlet/C.B.:	High back:	*Neenah R-3281-A or R-3278-1*
	Depressed:	*Neenah R-3506-A2*
C.B., "behind the curb type":		*Neenah R-3305*
		Neenah R 1713 (Refer to Lid Detail)
C.B./M.H., Type "D":	Grate:	*Neenah R 1713 (Refer to Lid Detail)*
	Frame:	*Neenah R-1713*
C.B., "beehive type":		*Neenah R-4340-B*

3. **Manhole:** Manholes shall be reinforced concrete with steps provided 16" on-center. All manholes shall have a minimum inside diameter which conform to the following:

   - 18" storm sewer and smaller – 4' inside diameter
   - 21" to 36" storm sewer – 5' inside diameter
   - Larger than 48" storm sewer – special design required
   - Stamp top manhole cover "Village of South Elgin – Storm"

4. **Sewer Pipe, Materials:** Main line storm sewer shall be constructed of one of the following:

   a. Pre-cast reinforced concrete pipe, with "O-ring" joints;

   b. PVC pipe, rigid, (Min. SDR 26 or C900 with tracer wire, push-on gasket joints);

   c. All joints shall conform to ANSI 21.11 for ductile iron pipe (ceramic lined).

   d. Ductile iron pipe, (Class 52) (ceramic lined), minimum;

   e. **FOR PRIVATE USE ONLY. NOT TO BE USED WITHIN PUBLIC RIGHT-OF-WAY OR FOR PUBLICY OWNED AND MAINTAINED STORM SEWER.** HDPE pipe,

(Rigid with corrugated exterior and smooth interior meeting AASHTO M-294, Type S. Pipe sections shall be joined with PVC double bell couplers installed on the pipe with O-ring gaskets. Ex-filtration standards shall meet or exceed that of PVC SDR 26 or C900 with push-on-joints.)

f. The type of pipe material will be dependent upon the depth of bury, soil conditions, and pipe criteria, and as approved by the Village of South Elgin.
g. For RCP/CSP pipe, lifting holes shall not be allowed on pipes less than 84" in diameter.

h. All storm sewer smaller than 15" in diameter that will be publicly owned and maintained shall be PVC pipe, rigid, (Min. SDR 26 or C900 with push-on gasket joints).

5. **Flared End Section:** Flared end sections and subsequent riprap material shall be designed and specified per the Illinois Department of Transportation "Standard Specification for Road and Bridge Construction" latest edition.

SECTION III

STORM WATER MANAGEMENT / SITE GRADING

A. DESIGN GUIDELINES
B. DESIGN RESTRICTIONS
C. DESIGN REQUIREMENTS

STORM WATER MANAGEMENT DESIGN REQUIREMENTS

A. Design Guidelines:

STORM WATER MANAGEMENT GUIDELINES:

A. The provisions of the following sections of the Kane County Storm Water Management Ordinance #00-312 are hereby adopted by reference, together with the special regulations listed below modifying said Kane County Storm Water Management Ordinance, as the regulations governing storm water run-off control within the boundaries of the village: Articles 1, 2, 3, 4, 5, 6, 9, 10, 12, 13 and 14.

B. The following are amendments or modifications to the Kane County Storm Water Management Ordinance and correspond to the numbering system within said ordinance:

Section 300(h): Amend to read as follows:
Storm water pollution prevention plans shall be in accordance with Article 5 and shall include the following:

1. For all construction sites that will result in the disturbance of one or more acres total land area, or construction sites less than one acre of total land that are part of a larger common plan of development or sale if the larger common plan will ultimately disturb one or more acres total land area:

   A. Provisions showing that the storm water pollution prevention plans for all construction sites meet or exceed requirements of Part IV of NPDES permit No. ILR10.

   B. Provisions showing that the construction sites have post-construction storm water management that meets or exceeds the requirements of Part IV, § (D)(2)(b) of NPDES permit No. ILR10.

2. Detailed construction phasing plan identifying erosion and sediment control measures to be in place for each phase shall be submitted.

3. Erosion and sediment control measures to be installed initially prior to stripping existing vegetation or mass grading shall be indicated on the plans.

4. Permanent stabilization measures shall be indicated on a separate plan.

5. The expected two-year and ten-year runoff rates from all offsite areas draining into the site shall be identified on the plan.

6. Methods for conveying flows through the site during construction shall be indicated. These methods must include the temporary and permanent stabilization measures to be used to reduce velocity and erosion from flow through the construction zone.

7. A maintenance schedule of each measure used shall be indicated on the plan. As a minimum, all erosion and sediment control measures onsite shall be inspected weekly or after a one-half inch or greater rainfall event and any required repairs shall be made to keep these measures functional as designed.

8. Special management areas and any required buffers shall be indicated on the erosion and sediment control plan.

Section 300(o): A new section (o) is to be added as follows:

Construction site operators must control wastes (discarded building materials, concrete truck washout, chemicals, litter and sanitary wastes) at the construction site that may cause adverse impacts to water quality.

Section 500(c): Amend to read as follows:

The following permit fee shall be paid at the time of application: $100 for administration of the permit. The developer (permittee) shall agree to pay all review and inspection costs prior to, during and after construction, through the time of final acceptance by the Board of Trustees. Payments shall be made within 30 days of invoicing. Failure to pay within the time allotted shall result in the stoppage of all work on the development until such time as all payments due are current.

Section 902: Amend to read as follows:

With the filing of the application for a variance, the applicant shall pay a fee of $250. The applicant shall agree to pay all consultant review costs throughout the variance process until completion. Payment shall be made within 30 days of invoicing. Failure to pay within the time allotted shall result in the stoppage of all work on the development until such time as all payments due are current.

Section 1002: A new section (p) is to be added as follows:

The administrator is hereby designated to be the Village Engineer of the village.

Section 1004: Amend to read as follows:

Oversight committee: The Community Development Division is hereby established as an oversight committee to oversee the implementation and enforcement of this ordinance within the village, and to perform the duties assigned to the oversight committee in this ordinance. The oversight committee, when considering an appeal or request for a variance under this ordinance, may request an opinion from a qualified engineer review specialist or qualified wetland review specialist on technical issues.

Section 1005: Amend to read as follows:

Decision-making authority: There is hereby established a decision-making authority to perform the duties assigned to the decision-making authority in this ordinance. The decision-making authority is hereby designated to be the Board of Trustees of the village. The decision-making authority, when considering an appeal or request for a variance under this ordinance, may request an opinion from a qualified engineer review specialist or qualified wetland review specialist on technical issues.

Section 1201(c): Amend to read as follows:

The administrator may approve periodic reductions in the amount of security based upon the progress of construction. At no time, however, shall more than 75% of the security be released prior to approval of record drawings and final inspection. A minimum of 25% of the original amount of the security shall be retained for a period of one year after completion of all required storm water facilities.

Section 1300: Amend to read as follows:

The administrator may require, or in the limited circumstances prescribed in Article 2 an applicant may request approval of, the payment of a fee-in-lieu of site runoff storage to fulfill all or part of the site runoff storage requirement for a development. The fee to be paid in lieu of site runoff storage shall be the certifiable cost of otherwise providing the required storage, including the value of the land required and all construction costs. For this purpose the land required shall be valued according to the use to which it will ultimately be put if not used to provide the required storage.
(Ord. 2001-28, passed 6-18-01; Am. Ord. 2002-103, passed 12-2-02; Am. Ord. 2006-15, passed 4-17-06)
Cross-reference:
Stormwater Management Ordinance Enforcement, see § 153.111

B. Design Restrictions:

1. High Water Level: The proposed grading conditions shall not result in conditions that will cause water to pond on adjacent property or to rise within 2' of any existing or proposed top of foundation elevations or low opening of a structure.

2. Off-site Grading: Off-site grading will not be permitted unless permission in the form of an easement is obtained from the subject property owner.

3. Release Rates: Storm water release rates shall meet or exceed the Kane County Storm Water Ordinance as adopted and modified by the Village of South Elgin.

4. Watershed Boundaries: Proposed construction may not result in any modification to existing watershed boundaries or the alteration of off-site drainage patterns.

5. Wetlands: Existing wetlands may not be altered without an authorized permit from the Army Corps of Engineers, as well as consent from FEMA, the IEPA, and the Department of Natural Resources, Office of Water Resources.

C. Design Requirements:

1. Detention Basins (Dry Basins): Shall meet or exceed the Kane County Storm Water Ordinance as adopted and modified by the Village of South Elgin.

2. Detention Basins (Wet Basins): Shall meet or exceed the Kane County Storm Water Ordinance as adopted and modified by the Village of South Elgin.

3. Flared End Section: Flared end sections shall be required in any areas where a storm sewer discharges into a detention basin. Trash grates shall be provided on all flared end sections 12" in diameter and greater. Permanent erosion control shall be provided with riprap at all flared end sections. Temporary erosion control in the form of sediment logs shall be provided at all outlet flared end sections, and shall be maintained until the topsoil has been adequately stabilized with vegetative cover. All flared end sections greater than or equal to 12" that will receive or discharge storm water, shall have a removable grate system to prevent entry. This grate system shall be made from steel stock that is hot-dipped galvanized after fabrication.

4. Green Space, Slope Requirements: Green space slopes shall conform to the following:

- 4:1 maximum slope
- 2% minimum slope
- Where retaining walls are required, a registered Illinois Structural Engineer must sign the plans if the proposed height is 4' or higher.

5. Inlet Ponding, Maximum Levels: The engineer shall calculate the 100-year water surface elevations for the storm water storage facilities. Inlet ponding in excess of 1' during a 100-year event will not be permitted. The overflow route and limits of ponding shall be clearly illustrated on the plans. Paved parking lots may not be utilized to provide any portion of the required site run-off storage volume.

6. Overflow: An overflow drainage route must be established. All storm water management facilities shall have a clearly defined and protected overflow route illustrated with an overflow elevation and a large arrow. The overflow routes through the subdivision shall also be illustrated with large arrows, and spot elevations shall be shown at 50' intervals along the route.

7. Pavement, Slope Requirements: Pavement slopes shall conform to the following:

- 1% minimum and 5% maximum slope (pavement)
- 0.5% minimum slope (curb & gutter)
- 8% maximum slope (driveways only)

8. Release Rate: Shall meet or exceed the Kane County Storm Water Ordinance as adopted and modified by the Village of South Elgin.

9. Release Structures: Shall meet or exceed the Kane County Storm Water Ordinance as adopted and modified by the Village of South Elgin.

10. Storm Water Management Report: A Storm Water Management Report shall be submitted to the Village for review. The report shall include the following:

- All appropriate permit forms, associated fees need to be submitted.
- A narrative that discusses topographical conditions, soil conditions, analysis methodology, modeling results, and conclusions.
- Data from an analytical modeling program which features hydrograph methodology, TR20 or equal.
- A critical duration analysis shall be performed which analyzes the proposed topographic and drainage conditions for the 2, 6, 12, 18, and 24 hour durations of the 100-year rainfall. Hydrograph methodology shall be used in cooperation with projected rainfall data as documented in the "Bulletin 70 Huff Distribution Curve". The largest storage volume that is produced from this analysis shall be the required volume for the development.
- Basin sizing calculations; required and proposed storm water storage volumes.
- Storm water release structure calculations including proposed, required, and existing release rates.
- Exhibits which illustrate the following:
    - Existing conditions (i.e.: topography, buildings / structures, water bodies, roadways).

- Proposed conditions (i.e.: topography, lot alignments, top of foundation elevations, roadways, drainage ways, storm water storage facilities, overflow routes).
- Existing and proposed watershed boundaries and ridgelines.

- Proposed 100-year water surface elevation and high water level.

11. **Topography:** A drainage plan shall be provided which includes the following:

- 1' contours.
- Easements, including dimensions and easement type.
- Proposed storm water storage facilities.
- Existing water bodies and drainage features.
- Proposed roadways and rights-of-ways.
- Proposed lot alignments and lot numbers.
- Proposed top of foundation elevations.
- Overflow drainage routes and 100-year water surface elevations with cross sections.
- Proposed basin volumes, 100-year water surface elevations, and high waster levels.
- Storm sewer appurtenances.
- Proposed elevations at all lot corners and along all break points at side yards.

B. Materials:

1. **Casing:** Where water main protection is required, encasement shall consist of C900, or steel casing with *"Cascade type CCR-STD"* spacers or approved equal.

2. **Flared End Section:** Flared end sections shall be required in any areas where a storm sewer discharges into a detention basin. Trash grates shall be provided on all flared end sections 12" in diameter and greater. Permanent erosion control shall be provided with riprap at all flared end sections. Temporary erosion control in the form of straw bales shall be provided at all outlet flared end sections, and shall be maintained until the topsoil has been adequately stabilized with vegetative cover. All flared end sections greater than or equal to 12" that will receive or discharge storm water, shall have a removable grate system to prevent entry. This grate system shall be made from steel stock that is hot-dipped galvanized after fabrication.

SECTION IV

WATER SYSTEM

A. DESIGN RESTRICTIONS
B. DESIGN REQUIREMENTS
C. MATERIALS

WATER SYSTEM REQUIREMENTS

A. Design Restrictions:

1. **Dead End Water Main:** The construction of dead end water main will not be permitted. Where dead end mains cannot be avoided on a temporary basis, a fire hydrant shall be placed at the end.

2. **Pipe Compound Pipe:** Pipe compound will not be permitted in any water main construction, including service connections. A general note to this effect shall be included in the Final Engineering Plans.

B. Design Requirements:

1. **Tunneling:** Augering or directional drilled will be required at all roadway crossings unless otherwise permitted by the Village of South Elgin Public Works Director. Steel casing and "Cascade" spacers shall be utilized exclusively. Following completion of the auger, the casing shall be filled with pea gravel or sand, the ends shall be blocked and mortared shut, or have end boots installed.

2. **Cover Depth:** All water main, hydrant leads, and services must have a minimum cover of 6' and a maximum cover of 10'. Variations from these standards will require approval of the Public Works Director.

3. **Fire Flows:** Fire flows shall be calculated at a twenty (20) psi residual pressure and shall be available for a minimum 4-hour continuous duration for flows above 2,000 gpm, and a 2-hour continuous duration for flows below 2,000 gpm.

4. **Hydrant Spacing:** Hydrants must be placed at a minimum of 400' intervals, and may not be less than 5' from the back of curb. No buildable area shall be farther than 200' from a fire hydrant, and a minimum of one (1) hydrant shall be located at each intersection. For larger projects, hydrants shall be proposed at high points for air release. All hydrant locations shall be coordinated with the Village of South Elgin Fire Protection District and appropriate Public Works Department.

5. **Horizontal and Vertical Separation:** Water mains and Sewer horizontal and vertical separations shall conform to the latest version of the "Standard Specifications for Water & Sewer Construction in Illinois". Reference to these standard and specifications should be made when it is impossible to meet separation requirements for casing pipe requirements (refer to Standard Casing Pipe Detail).

6. **Abandoning and Replacing Existing Services:** All existing services shall be abandoned at the corporation stop (close corporation stop, cut services, and install copper disk). Existing services should be replaced from the new main to the B-Box if

service is lead. If service is copper, it should be cut and tapped into the new main. Approved trench backfill material is to be placed where any trench lies within 3' of the edge of pavement, curb, or sidewalk. It is assumed all lines are lead and must be replaced to B-Box.

7. **Interruption of Water Usage:** Water services may only be interrupted when the transfer of services to the new main takes place. Services shall be transferred subsequent to testing and chlorination of the proposed main. The contractor shall contact the Village of South Elgin Water Division at 1-847-695-2742 prior to transfer of service. Residents and Businesses must be informed a minimum of 24-hours in advance, during normal business hours (7:00 am – 3:30 pm) of any interruption by the Village of South Elgin Water Division staff.

8. **Services, Domestic:** Domestic water services shall be prided to each lot. The minimum size for domestic services is 1". Once installed all services extending to the Village right-of-way limits shall be located utilizing a 4" x 4" treated wooden post painted blue.

9. **Services, Fire Protection:** Where fire protection services are required, separate domestic and fire protection services shall be provided. Each service must have an independent tie into the public water main.

10. **Thrust Blocking:** Preformed concrete block thrust blocking shall be provided at all bends greater than 10 degrees, at all mechanical joint connections, and at all fire hydrants (refer to Village Thrust Blocking Detail).

11. **Trench Backfill:** All utility and service trenches within 3' of paved surfaces, or at a distance specified by the Public Works Director, shall be backfilled with CA-7 (Virgin Crushed Limestone, as defined by Bluff City). All Backfill material shall be properly compacted unless otherwise directed by the Public Works Director. Backfill under existing pavements, where an open cut of the pavement has been approved, shall be Flowable Fill that meets the IDOT standards of Controlled Low Strength Material (CLSM) Mixture #1. No fly ash will be permitted in this mix (refer to Village Pipe Trench Detail).

12. **Valve Spacing:** Right-hand closing resilient wedge gate valves at intervals not over 600' intervals.

13. **Valve Vaults:** Valve vaults are to be precast reinforced concrete, eccentric type. A maximum of (8-inches) of adjusting rings shall be used.

14. **Frame and Covers:** All valve vault structures shall have a Neenah Foundry Company R-1713 frame and type "B" Lid with concealed pick hole. Lids shall be furnished with

"Village of South Elgin - Water" cast into the top surface (refer to Village Standard Cover Detail).

15. **Water Main, Minimum Size:** The minimum size for any public water main shall be 8" (with the exception of hydrant laterals that may be 6", (see design requirement #3 above for fire flow considerations).

16. **Separation:** A ten-foot horizontal separation shall be maintained between water mains and appurtenances, and all other utilities, public or private.

17. **Appurtenance Separation:** Water appurtenances shall be a minimum of 20' from permanent structures; this applies to any structure that may require a building permit (i.e. retaining walls, pools, shed, garages, etc.).

18. **Dead Ends:** Dead end water mains longer than 300' should not be permitted. The water system must be extended, as a minimum, to the limits of the development and looped wherever possible. Note on all plans which mains are to be public and private.

19. **Adjustment of Structures:** All adjustments to valve vaults shall be made with precast concrete adjusting rings not to exceed a maximum of eight (8) inches overall in height. Watertight valve vaults shall be provided for each valve. Barrel sections shall be seated using two (2) butyl rubber strips per tongue and groove section. Valve vaults are to be precast reinforced concrete, concentric type. After final adjustments have been made, all joints in precast structures shall be mortared. The mortar shall be composed of one part cement to three parts sand, by volume, based on dry metals and shall be thoroughly wetted before laying. Vaults may only be extended to a maximum of 23" from the surface to the inside flare of the manhole cone section.

20. **Connecting to Existing Water Mains:** Connection to the end of an existing a water main shall be with a valve only. No new water main should be connected to the existing water main unless the new water main can be pressure tested separately. Connection to an existing water main shall be done by pressure connection only unless authorized by the Public Works Director. Pressure connection and valve shall be located within the valve vault. No pressure connection shall be within 3' of an existing water main joint. If pressure connection cannot be done, use a cut in sleeve and tee connection. All fittings will be swabbed out with a chlorine solution of at least 50 mg/L. A Village Representative must test this solution.

21. **Service Connections:** Service connections to water mains are not permitted until after bacteriological sampling and analysis has been completed to the satisfaction of the Public Works Director. No water service connection shall be made by any

person or firm other than a State of Illinois licensed contractor, with a State of Illinois licensed plumber on the job, and bonded with the Village. All water services and water service connections must be inspected by the Village's plumbing inspector.

22. **Water Main Taps:** The following are the requirements for water main taps:

    1. All taps into a cast iron water main must use a full circle stainless repair-tapping clamp, minimum of 12" X the diameter of the pipe.

    2. All taps into ductile iron water main that are 1" will be direct tap.

    3. All taps into ductile iron water mains that are over 1" must use a full stainless steel tapping clamp, minimum of 8" X diameter of the pipe.

    4. All water main repair bands must be the full circle stainless steel type, minimum of 12" X diameter of the pipe.

23. **Landscaping:** Landscape plantings shall not interfere with operation and maintenance of water appurtenances. Trees shall be placed no closer than 10' from any structure(s).

22. **Fire Hydrants:** Fire hydrants shall be installed with a maximum of one extension kit used, and a maximum extension of 36". Fire hydrant extension kits must be of the same manufacture as the hydrant, and must be installed according to the manufacturer's specifications.

23. **Joint Restraint:** All mechanical joint fittings shall have restraining glands installed. Restraint device shall be Mega-lug by EBAA Iron. Push joint pipe restraint shall be Field Lock Gaskets by US Pipe or Series 1700 Mega-lug. Lengths of pipe restraint shall be determined from manufacturers' installation specifications (refer to water main restraint detail).

24. **GIS/GPS Standards:** All work will conform to the Village's GIS/GPS Standards found in Section VIII-*Inspection Procedures* of this manual.

25. **Water Details:** Typical water details can be found in Section IX-*Engineering Details* for reference.

C. Materials:

1. Corporation Stops:

a. Compression fittings.

i. A. Y. McDonald 4701-BQ (1", 1 ½", 2")

2. Curb Stops:

a. Compression fittings.

i. A. Y. McDonald 6104-Q (1”, 1 ½”, 2”)

3. **Curb Box:** (Minneapolis pattern, lid marked “WATER”)
4. **Buffalo Type:**
   a. A. Y. McDonald, 5615 1 ¼”

5. **Fire Hydrant:**
   a. Approved Models: (Refer to standard Fire Hydrant Detail)
      i. Waterous Pacer Model WB-67-250 – Red Factory
      ii. All hydrants shall have:
         1. 6” mechanical joint connection
         2. 5 ¼” valve opening
         3. 5-1/2’ cover over hydrant lateral
         4. 6” valve on lateral
         5. “Hydra-finder” standard hydrant locator, installed
         6. Valve box shall have a valve box stabilizer installed*
         7. 30” center hydrant to center of valve.

         *(Valve box adaptor #2 type A, as made by Adaptor, Inc. or approved equal)

6. Fire Hydrant Paint: International® Intercure 99® Safety Red Tinted via Chromascan system, Color Number 71016 Base-QNA044/3GL.

7. Bolts Placed Underground: All below grade factory installed bolts and fasteners shall be 304-grade stainless steel.

8. Valves: 4” through 16” diameter” Right-hand closing Resilient Wedge gate valves, conforming to AWWA Standard C-509 as manufactured by the Clow Corporation, Waterous Company. All below grade factory installed bolts and fasteners shall be 304-grade stainless steel.

9. Water Supply Control Valves and Meter: Valves shall be located underground following these guidelines:

a. Locate all meters in an accessible location for Village personnel to inspect and replace. A crawl space, pit or under a stairway will not be considered accessible.

b. Provide protection from damage for water meter in non-residential buildings.

c. Provide full port ball valve within 16” of entering the building space and immediately after the meter.

d. Commercial buildings or units that share a single water service for fire protection and domestic supply, at the discretion of the Director of Public Works, subject to the following conditions:

   i. An accessible outside shutoff valve installed on the service line.
   ii. Buildings on slab must have a shutoff valve installed on the service line located in the outside wall of the building that faces the street and labeled “WATER” with 6” letters.
   iii. Meters shall be in a central place accessible from the building exterior to Water Department personnel for maintenance, inspection or shutoff. Each meter must, however, be supplied a locking valve approved by the Village.
   iv. Provide B-box shutoff valves for residential buildings.
   v. Extend B-box to finished grade.
   vi. B-boxes cannot be located in driveways or sidewalks.
   vii. Provide one main shutoff valve accessible to Village personnel for multi-unit buildings. In addition, provide shutoff to each individual units as follows:

      1. Located B-boxes together in the same order as the units.
      2. A 24-hour outside accessible meter room will be allowed.
      3. Separate complete water services shall be required from the water main for each. Each service line shall be separately metered. In lieu of separate services, meters shall be in a central place accessible from the building exterior to Water Department personnel for maintenance, inspection, or shutoff. Each meter must, however, be supplied a locking valve approved by the Village.

10. RPZ Valve Requirements:

a. RPZ required on domestic water supply to all non-residential buildings.
b. RPZ required on water supply to all fire sprinkler systems.
c. Upon a showing of circumstances to warrant same, a double check valve may be substituted for an RPZ device on fire protection systems with the approval of the Director of Public Works.
d. Install RPZ a minimum of 12" and a maximum of 4 feet above the finished floor elevation measured from the bottom of the device.
e. Install RPZ a minimum distance of 12" from any building structure of safety devices as measured from the body of the device.
f. Install RPZ a maximum of 5 feet from a floor drain.

11. Valve Vaults: Watertight valve vaults shall be provided for each valve. Barrel sections shall be sealed using a butyl rubber or rubber strip (refer to Village Standard Valve Vault Detail).

a. 3" through 6" valves . . . . . .Min. 4' inside diameter vault minimum
b. 8" and larger valves . . . . . .Min. 5' inside diameter vault minimum
c. Pressure Taps . . . . . .Min. 5' inside diameter vault minimum
d. Valve Vault Lid . . . . . .Neenah R-1712, Type B or approved equal
e. The word "WATER" shall be cast into the surface of the lid.
f. Vaults are not required for hydrant auxiliary valves except when a pressure tap for a hydrant lateral is in a roadway.
g. All vaults to have steps.

12. Water Main Pipes:

a. Ductile Iron Class 52, conforming to AWWA Standard C-151.
   i. Cement Lining, conforming to AWWA Standard C-104 (ceramic lined).
   ii. Mechanical or push-on joints shall conform to AWWA Standard C-111.
   iii. At minimum, Type 3 laying conditions shall be provided, conforming to AWWA Standard C-600 (Attached).
b. All water mains shall be encased in a High Density polyethylene encasement with its material specifications and installation method in accordance with ANSI.AWWAC105/A21.5, ASTM A674, using "Method A" installation.
c. All side yard and rear yard water mains not directly adjacent to public roadways or paved surfaces shall be Ductile Iron Pipe (ceramic lined), Class 55 with a type 5 laying conditions.
d. Brass Wedges shall be installed to provide electrical conductivity.

13. Joint Restraint: All mechanical joint fittings shall have restraining glands installed. Restraint device shall be Mega-lug by EBAA Iron. Push joint pipe restraint shall be Field Lock Gaskets by US Pipe or Series 1700 Mega-lug or Series 1390 Pipe Restraint by Ford. Lengths of pipe restraint shall be determined from manufacturers' installation specifications.

14. Copper Service Lines:

a. 1" diameter minimum.
b. Type K copper tubing.
c. Compression fittings only.

1" service connections only may be connected utilize the direct tap methods to 6" mains and larger only. If there is insufficient diameter water main to install a direct tap, then a saddle tap shall be allowed. Service taps of 1 ¼", 1 ½", & 2" require the use of a tapping saddle. Saddles shall be full circle, 304-grade stainless

steel, with nylon washers and Nitrile gasket, as manufactured by Cascade Waterworks Mfg. Style CSC2 double bolt clamp.

15. Tapping Sleeves:

a. 4" through 8" diameter:

i. Stainless steel or approved equal or Cascade Waterworks Mfg. Style CST-EX tapping sleeve.

16. Casing Pipe: Carrier pipe shall be centered within a casing by use of model CCS stainless steel Casing Spacers as manufactured by Cascade Waterworks Mfg. of Yorkville, Illinois or prior approved equal. Fill casing pipe void with sand and install End Boots as manufactured by Cascade Waterworks Mfg. of Yorkville, Illinois.

17. Ductile Service Lines:

a. Fire:

i. The first O. S. & Y. valve on the inside of the building must be in place for pressure testing, chlorination and sampling.

ii. Testing against flanges will not be allowed.

b. Domestic:

i. The first permanent valve on the inside of the building must be in place for pressure testing, chlorination and sampling.

ii. Testing against flanges will not be allowed.

SECTION V

PAVEMENT / ROADWAYS

A. DESIGN REQUIREMENTS

STREET SYSTEM REQUIREMENTS

A. Design Requirements:

1. Generally: Street systems shall be designed to meet the requirements of the applicable jurisdiction (i.e., Village, IDOT, KDOT). Any proposed street dedication shall be in accordance with the following standards.

2. Right-of-way and Pavement Width Requirements:

1. Local Residential Street:

a. This type of street provides frontage for access to lots and carries traffic having its destination or origin on the street itself. It shall be designed to carry the least amount of traffic at the lowest speed, with expected Average Daily Traffic (ADT) between 0 and 1,000 vehicles. Subdivisions shall be designed so that the maximum number of housing units shall front on this class of street. Cul-de-sacs shall be analyzed as other local access streets.

b. This classification is further subdivided according to density of development, which density shall be determined by the Village Administrator for logically compact and contiguous areas within a development. Such designed areas shall be centered on the particular street which is to be evaluated. The Village Administrator, in determining the appropriate sub-classification according to density, shall take into account such other factors as are appropriate in the circumstances.

i. *Low density.* 0 – 4 dwelling units per acre (DU/A). Pavement width shall be 28 feet face to face of curb (F/F). Parking permitted on both sides of the street. Note: Residential access streets in estate residential areas (lots of two acres or more) may be narrower if parking is prohibited on both sides.

ii. *Medium density.* 4.01 – 10 DU/A. Pavement width shall be 30' face to face of curb F/F. Parking permitted on one or both sides of the street.

iii. *High density.* 10.01 or more DU/A. Pavement width shall be 36' face to face of curb F/F. Parking permitted on both sides.

2. Residential Collector:

a. This type of street provides frontage for access to lots, and carries traffic of adjoining residential access streets. It conducts and distributes traffic between residential streets and thoroughfares, with expected Average

Daily Traffic (ADT) of 1,000 to 3,000 vehicles. Residential collector streets are not intended to carry regional through traffic.

b. Pavement width shall be 30' F/F. Parking shall be permitted on one side of street only. Pavement width shall be 36' F/F in locations where the Village Board approves parking on both sides of the street.

3. Secondary Thoroughfare: (Major Collector)

a. This type of street is used to carry traffic from residential streets to major thoroughfares. It may or may not serve adjacent property, and shall contain two moving lanes of traffic, (with expected Average Daily Traffic (ADT) of 3,000 to 7,000 vehicles.) The primary purpose of this street is to serve local traffic and not connect community to community.

b. Pavement width shall be 36' F/F. This street may or may not have two lanes parking.

4. Major Thoroughfare: (Minor Arterial)

a. This is a higher order, interregional road designed to serve as a major traffic artery for movement of vehicles through the village of between various parts of the village (with expected Average Daily Traffic (ADT) of 7,000 to 13,000 vehicles.) It conveys traffic between population and activity centers, and shall be excluded from residential neighborhoods.

b. Pavement width shall be 44' F/F minimum, consisting of two through lanes with parking on both sides of the street or 46' F/F four lanes with no parking.

Minimum Standard for Street Design							
	Major Thoroughfares	***Secondary Thoroughfares***	***Local Residential Streets***	***Cul-de-sac***	***Marginal Access***	***In Business District***	***In Industrial District***
Right-of-way width	80 – 100 ft.	80 ft.	60 ft.	60 ft. 120 ft.*	40 ft.	80 – 100 ft.	80 – 100 ft.
Pavement width (F/F of curb)	44 – 46 ft.	36 ft.	28 – 36 ft.	28 ft. **	24 ft.	48 ft.	40 ft.
Min. radius of horizontal curves (road centerline dimensions)***	300 ft.	250 ft.	180 ft.	180 ft.	200 ft.	500 ft.	400 ft.
Vertical curves***	Vertical curves shall provide the following minimum sight distances measured between points 3.5 ft. above the centerline of the roadways:						
	425 ft.	305 ft.	200 ft.	200 ft.	200 ft.	400 ft.	300 ft.
Min. tangents between reverse curves (road centerline dimension)	200 ft.	200 ft.	120 ft.	120 ft.	100 ft.	200 ft.	200 ft.
Max. gradient	3%	3%	6%	6%	6%	3%	3%
Min. gradient	0.5%	0.5%	0.5%	0.5%	0.5%	0.5%	0.5%
Min. curb radius at street intersections	30 ft.	25 ft.	25 ft.	25 ft.	25 ft.	30 ft.	30 ft.

* Terminus diameter.
** No parking.
***Can vary based on design speed. See AASHTO Geometric Design of Highways.

3. **Pavement Lengths:**
   a. Maximum residential block length shall be per Chapter 153-*Subdivisions*.
   b. Cul-de-sac shall have a maximum length of as defined in Chapter 153-*Subdivisions*.

4. **Pavement Design:** Pavements shall be designed and constructed so as to obtain a minimum 20-year service life with minimal maintenance after acceptance of the pavement by the Village of South Elgin. The design engineer should consider such factors as construction and end use traffic loading sub-base I.B.R., etc., in determining the structural make-up of the pavement section.

   a. **Pavement Materials and Minimum thickness:** The following pavement sections are the **MINIMUM** acceptable to the Village. Their use must be supported by calculations to substantiate the use of the minimum pavement section.
      i. The following types of street surfacing shall be considered minimum requirements in accordance with the standard specifications:
         1. Local residential street.
            a. 4" granular sub base, 6" PC concrete; or
            b. 12" aggregate base course, 2-1/2" hot-mix asphalt binder course, 1-1/2" hot-mix asphalt surface course.
         2. Residential collector.
            a. 4" granular sub base, 6" PC concrete; or
            b. 4" granular sub base, 6" hot-mix asphalt base course, 1-1/2" hot-mix asphalt surface course; or
            c. 15" aggregate base course; 2-1/2" hot-mix asphalt binder course, 1-1/2" hot-mix asphalt surface course.
         3. Secondary Thoroughfare (Major Collector).
            a. 4" granular sub base, 7" PC concrete; or
            b. 4" granular sub base, 6" hot-mix asphalt base course, 2-1/2" hot-mix asphalt binder course, 1-1/2" hot-mix asphalt surface course.
         4. Major Thoroughfare (Minor Arterial).
            a. 6" granular sub base, 8" PC concrete; or
            b. 6" granular sub base, 7" hot-mix asphalt binder course, 2-1/2" hot-mix asphalt binder course, 1-1/2" hot-mix asphalt surface course.

      Note: All asphalt is to be laid by a self-propelled mechanical spreader.

   b. **Sub-grade:** All sub-grade material shall have a minimum Illinois Bearing Ratio (IBR) of 3.0. All unsuitable sub-grade material, including sub-grade material having an IBR less than 3.0 shall be removed and replaced with a suitable fill material, or the pavement must be designed to compensate for the soil

condition. The soil support IBR values selected for use by the engineer shall represent a minimum value for the soil to be used.

c. **Pavement Design Shall Include:** In addition to the information provided in the right-of-way and pavement requirements, pavement design shall include the following:

i. Public Alleys shall be constructed of reinforced Portland Cement Concrete (PCC) designed in accordance to specifications listed above for rigid pavements.
ii. Maximum allowable pavement grade = 7% and minimum allowable pavement grade = 0.5%;
iii. Driveway grades shall have a minimum slope of 1% and a maximum slope of 8%. All driveway grades in excess of 5% shall substantiate that vehicular bottom clearances are met.
iv. Vertical curves shall be used when the absolute value of the algebraic difference between the intersecting pavements' centerlines exceed 1.5%. The minimum length of vertical curves shall be 100' for 1-1/2% absolute value of the algebraic difference of grade. For each additional 1%, or fraction thereof, of absolute value of the algebraic difference in grade over 1-1/2%, a 50' increment, or fraction thereof, shall be added to the length of the vertical curve.

v. The minimum intersection curb radius:
1. Two (2) minor streets: 25'
2. Minor and collector streets: 30'
3. Two collector streets: 40'
4. Truck routes or zoned manufacturing: 45'

vi. Curb and gutter shall be a B-6.12 barrier type unless otherwise directed by the Village of South Elgin Public Works Director. Curbs shall be constructed of 6.1 bag mix Portland Cement Concrete: 5-8% air entrained, (PCC) with two (2), continuous epoxy coated, #4 rebar. A 1" expansion joints shall be placed at 60' intervals, and contraction joints shall be at 15' intervals and all points of curvature. All B-box, sanitary services and storm service locations shall be marked on the curb with a "W", "S" or "ST", as the case may be. All Portland Cement Concrete (PCC) shall be treated with a protective coat application.
vii. 26' wide hot-mix asphalt pavement shall have a 4" crown as measured from the flag of the curb. 26' wide concrete pavement shall have a 4" crown as measured from the flow line of the gutter. Pavement shall have 2% minimum slope, 3% maximum slope.
viii. Pavement Patches

Note: All pavement patches shall be replaced in kind with the following revisions:

1. Flexible Pavement
Patches shall have a minimum of 6" Hot-Mix Asphalt Base Course, placed over a 4" compacted sub-base of granular material. 4-1/2" of Hot-Mix Asphalt Binder Course, IL-19.0, N50, and 1 ½" of Hot-Mix Asphalt Surface Course, Mix "C", N50 shall be laid subsequent to the Base Course. (See details for pavement patching).

2. Rigid Pavement
Concrete pavements shall be replaced with a minimum of 14 day, 3500 psi, 9" of Portland Cement Concrete mix placed over a 4" compacted granular sub-base (or match existing concrete pavement profile). The existing pavement shall have #6 epoxy-coated dowel bars, 2' in length, drilled at 24" on center, grouted in place. All Portland Cement Concrete shall be treated with a protective coat application. (See details for pavement patching). PCC shall be a 6.1 bag mix, 5-8% air entrained.

3. Composite Pavement
For pavements with a concrete base and asphalt surface, the concrete shall be placed at the same thickness as the existing pavement, but shall be a minimum of 8" thick. #6 Epoxy-coated dowel bars, 2' in length, shall be placed at 24" on center, grouted in place .

There shall be a minimum of 2 ½" surface asphalt placed over the concrete, Steel plates shall be placed over all Portland Cement Concrete patches until concrete is cured or a minimum of 3-days. (See details for pavement patching).

ix. Storm inlets and catch basins placed within the roadway surface shall be designed to incorporate an under drain system of perforated PVC pipe in accordance with the attached detail.

5. Sidewalks:

a. Public Sidewalks are to be constructed of a minimum of 5" thick by 5' wide, 6.1 bag mix Portland Cement Concrete (PCC) with (5-8%) air entrainment. The minimum width of sidewalks for single family developments shall be 5" thick by 4' wide, 6.1 bag mix Portland Cement Concrete (PCC) with 5-8% air entrainment. If 4' wide, 5' x 5' passing areas shall be provided in accordance with current PROWAG.

b. Public walks that cross driveways are to be thickened to a minimum of 6" or the thickness of the driveway; and contain 6" x 6" wire mesh reinforcement.

c. Sidewalks shall be constructed 1' off the street R.O.W. line unless otherwise directed by the Public Works Director.

d. Sidewalks shall be continuous through driveways and have no more than 2% cross slope across DW.

e. All utility service locations shall be stamped on the curb with a "W", "S" and "ST".

f. A 1" expansion joint shall be provided at 50' intervals, and contraction joints shall be at 5' intervals.

g. Ramping and sloping of sidewalks at street intersections shall be in accordance with the specifications and standards as set forth by the Illinois Department of Transportation, the American Disabilities Act (ADA), and the Illinois Disability Code.

h. Sidewalk cross slopes shall not exceed 2%.

6. **Signage:** Telescoping steel sign supports water V-lock base.

- All signs shall meet current MUTCD retro-reflectivity requirements.
- Lettering and border shall be white. Street sign shall be green.
- For two lane streets 25 MPH or less lettering shall be composed of a combination of 4" initial upper case letter and 3" lower case letters on an 8" high sign.
- For two lane streets > 25 MPH lettering shall be composed of a combination of 6" initial upper case letter and 4" lower case letters on a 12" high sign.
- Supplementary lettering to indicate type of street shall be 75% of size of street name. Conventional abbreviations shall be used.

7. **Alleys:** The minimum right-of-way width of an alley, if necessary and if provided, shall be 20'.

8. **Driveways:** 6" concrete residential, 8" concrete commercial with 6" x 6" wire mesh, 6" aggregate base.

Note: All concrete shall be treated with a protective coat application of linseed oil or curing compound equivalent for temperatures over 40 degrees.

SECTION VI

STREET LIGHTING

STREET LIGHTING

Subdivisions shall construct street lighting service installations on all public roadways as required by the Village of South Elgin to illuminate roadway and sidewalk surfaces and pay any costs or fees incidental thereto.

STANDARDS:

A. Village of South Elgin Streets:

- Minimum LED 90 watt luminaire fixture.
- Light(s) shall be provided at all street intersections, entrances to cul-de-sacs and at the closed end of cul-de-sacs.
- If additional street lights are proposed, they will have to be approved by the Village on a case-by-case basis.

B. Other Jurisdictions:

- For roads that are not under the Village of South Elgin jurisdiction, consult with the appropriate unit of government for their lighting standards.
- Where conflicts in standards occur, follow the more luminous standard.

FIXTURES:

1. Typical

A. Luminaire:

- Philips Lumec
    - 90W 48LED 4LC – R – LE3
    - Or approved equivalent, as per the Public Works Director.

B. Pole:

- Hapco – RTA Series (e.g. 25’ high – RTA25D7B4D1601)
    - Minimum Overall Height – 16’
    - Or approved equivalent, as per the Public Works Director.

C. Photocell or timing circuit:

- All luminaries shall have either an independent photocell or an interconnected photocell control as approved by the Village.

2. Village Center

A. Decorative lighting options are to be approved by the Village on a case-by-case basis.

B. See the Specification section for the Village Center approved lighting fixtures.

3. General

A. Base

2'x2'x7 deep Portland cement concrete foundation with steel reinforcing as appropriate. The top of form must protrude at least 3" above the finished grade and be formed accordingly. Augured ready-made helical galvanized steel foundation; or approved equivalent, as per the Public Works Director.

B. Ground Rods

5/8" x 10" copper-clad only and in sufficient number to maintain an appropriate electrical ground per the NEC, latest edition.

C. Cable

Single strand copper only, number six (6) gauge or larger. Type 11SF-RR or any type which is listed by U.L. Labs for direct burial (Multiple conductors not permitted). All cable runs under concrete, blacktop, public or private walks or roadways, shall be encased in Schedule 80 PVC conduit (1 ½" minimum diameter).

PROCEDURES FOR NEW LIGHT CONSIDERATION:

A. Light locations must be approved by the Village before service installation is initiated. Exact light locations should be indicated on the final engineering plans as prepared by an architect or engineer, and location of necessary easements and their location should be indicated .

B. Street light foundation shall be installed in conjunction with the development of streets, curbs and gutters:

1. No trenching is to be done until sanitary sewer, storm, electric, telephone, cable TV, gas and water has been installed.

2. Rough grading must be done before trenching will be permitted.

C. Trenches must be not less than 24" in depth, but more than 30" from finished grade.

D. Yellow marking tape indicating **"CAUTION BURIED ELECTRIC LINE"** must be installed in a trench above the cable within 6" to 12" from the finished grade.

E. The developer or contractor is responsible for contacting Commonwealth Edison to determine the proper cable termination for the required power source. (A map locating "as built" street light cable routes relative to property lot lines shall be furnished by the contractor to the Village.)

F. Three inspections by the Village shall be required of all service installations:

1. Base Installation;
2. Trenching and cable inspections; and
3. Electrical service connections.

G. Final inspections will be performed by the Village after service has been initiated by Commonwealth Edison. When appropriate, the street lighting poles and fixtures will be accepted by the Village Board as part of all the public improvements in the subdivision.

H. Street lighting on new private roads must meet the minimum standards as noted in this document.

I. The developer or contractor shall be responsible for the operation of the streetlights until such time they are accepted by the Village. Streetlights shall be repaired by the developer or contractor within 48-hours (2 business days) after notification. If the developer or contractor does not repair the streetlights, as needed, the Village reserves the right to repair them and invoice the developer or contractor at the current rate plus any applicable penalties.

J. The Village shall be responsible for the cost of electricity of any and all lights located on a block when the project is accepted by the Village. The developer shall request the appropriate contract amendment from Commonwealth Edison to transfer the billing from the developer to the Village when the development is accepted.

SECTION VII

DESIGN REFERENCES

DESIGN REFERENCES

All work shall be designed and constructed in accordance with the following references as they apply:

1. "Standard Specifications for Road and Bridge Construction," Illinois Department of Transportation, latest edition.

2. "Manual for Structural Design of Portland Cement Concrete Pavement," Illinois Department of Transportation, latest edition.

3. "Manual of Instructions for the Structural Design of Flexible Pavements on Projects involving MFT, FAS, and FAUS Funds," Illinois Department of Transportation, latest edition.

4. "Design Manual," Illinois Department of Transportation, latest edition.

5. Standard Specifications for Water and Sewer Main Construction in Illinois, latest edition.

6. Kane County "Storm Water Ordinance" as adopted by the Village of South Elgin.

7. Transportation Research Board of National Academies "Highway Capacity Manual", latest edition.

8. Federal Highway Administration "Manual on Uniform Traffic Control Devices, for Streets and Highways", latest edition.

9. American Association of State Highway and Transportation Officials "A Policy on Geometric Design of Highways and Streets", latest edition.

Note: Written requests received prior to final approval for alternate materials and/or construction methods will be reviewed by the Public Works Director prior to final approval.

SECTION VIII

INSPECTION PROCEDURES

A. STORM AND SANITARY
B. WATER DISTRIBUTION SYSTEM
C. PAVEMENT AND ROADWAYS

INSPECTION PROCEDURES
GIS/GPS Standards:

The Village of South Elgin uses GIS (Geographical Information System) technologies to store, manage, and maintain geographic/spatially-related data. Likewise, the majority of the civil engineering community has evolved to the point where the predominating design environment is computer aided design and drafting (CAD). It is the goal of the Village to use GIS and CAD technologies to acquire as-built data for all infrastructure installed. It is the responsibility of the developer to deliver complete and accurate GIS data prior to acceptance of any development. The standards below will guide integration of digital engineering CAD drawings into the GIS environment maintaining the integrity and positional accuracy of the data.

Blank attribute tables in geodatabase format will be provided by the Village for; water, sanitary, storm, electric, signs and trees. The fields are already formatted and are to be used for providing attribute information that corresponds to the infrastructure.

- All data shall be in coordinate system: NAD_1983_StatePlane_Illinois_East_FIPS_1201_Feet
- Do not rename any of the attribute tables.
- Do not alter the original formatting and structure of the attribute tables, or replace them with similar tables.
- Use the correct table being used for each sewer line, structure type, or other feature.
- All required fields filled in with appropriate data. Additional information entered in the non-required fields is also helpful.
- Correct units and precision used for pipe diameter, pipe length, upstream elevation, etc.
- Correct code from the lookup tables used when required. The lookup tables can be found in in the metadata associated with the geodatabases. Whenever possible use the code that most accurately describes the item.
- Removed or abandoned features need to be denoted as such within the attribute table.
- Collect GPS points of structures prior to burying.

General Notes:

- The lookup tables are not linked to the attribute tables, so they are used as a reference.
- Adhere to the requirements in any “Type” column in the Attribute Table Requirements. This formatting must be adhered to in order for the attribute information to be used properly.
- Excel (.xls) files can be accepted for the attribute tables as long as the formatting is kept the same and none of the field names are changed or deleted, however the original geodatabase file format is preferred.
- If it is unclear which attribute tables should be used or how to code any of the required fields please consult with the Village prior to delivering your digital data submission.

General Note: Inspection of the installation of a development's infrastructure is done to ensure conformance with the Engineering plans and specifications as approved by the Village of South Elgin or approved designee. The following sets forth the procedures of the Village of South Elgin:

A. Storm and Sanitary Sewer: Inspection of storm and sanitary sewer improvements throughout the Village of South Elgin will be performed to ensure that the project is being constructed in accordance with the approved Final Engineering plans, and to determine if minimum construction and material standards are achieved. If the developer or contractor desires to deviate from the approved plan or does not feel that minimum construction standards are being satisfied, he/she is responsible for contacting the Village immediately. The Village of South Elgin will not accept a substandard product, and will not be responsible for any additional cost incurred by the developer / contractor as a result. Items 1 & 2 of this list of tests shall be required for sanitary sewer improvements in South Elgin. An authorized representative of the Village of South Elgin shall supervise all tests. All tests shall be scheduled a minimum of 48 hours in advance.

NOTE: FOX RIVER WATER RECLAMATION DISTRICT (FRWRD) MUST SUPERVISE ALL SANITARY INSTALLATIONS.

1. Air Test: All sanitary sewers shall pass an air test in conformance with Section 31 of the "Standard Specifications for Water and Sewer Construction in Illinois". The sewer shall be tested at an initial pressure of 3.5 psig above the level of the ground water, and the time for a pressure drop of 1 psi shall be determined. The time for the pressure drop to occur shall not be less than that specified by the "Standard Specifications for Water and Sewer Construction in Illinois".

2. Deflection Test: All PVC sanitary sewers shall pass a mandrel test in conformance with Section 31 of the "Standard Specifications for Water and Sewer Construction in Illinois".

3. Televising: The Contractor shall provide the Public Works Department a current color video record and a type written transcription of the internal inspection of the newly constructed sewer system. This shall be submitted prior to refunding of site improvement escrow retention monies by the Village of South Elgin and final approval and acceptance of the system. **All public and private lines equal to and larger than 8" in diameter shall be videotaped.** The contractor must rotate the lens of the camera to look at all services. The service connections must be noted in the television report. When the proposed sanitary sewer system is to connect to an existing sanitary sewer system abutting the property, the existing sewer must also be televised and reported. The contractor shall coordinate the televising of existing contiguous sewers with the

Public Works Director. Costs associated with this work shall be borne by the contractor.

4. Acceptance Inspection: Prior to Board acceptance of public sewers, the Village of South Elgin Public Works Department must inspect and approve the improvement. A punch list of items that require corrective action will be generated, and the developer will coordinate resolution efforts and schedule a re-inspection. Following approval, the acceptance process may proceed. Acceptance inspections will be coordinated through the Public Works Department.

5. Maintenance Inspection: Prior to the release of a maintenance guarantee, the Village of South Elgin Public Works Department will re-inspect and approve the condition of the sewer improvement. This inspection is performed after a minimum of one year, at the developer's request, or following notification from the financial lending institution that the expiration date for the maintenance letter of credit is approaching. A punch list of items that require corrective action will be generated, and the developer will coordinate resolution efforts and schedule a re-inspection. Following approval, the maintenance guarantee will be released. The release of the maintenance guarantee shall be coordinated with the Public Works Department.

B. Water Distribution System: The mandatory inspection of water main improvements throughout the Village of South Elgin will be performed to ensure that the project is being constructed in accordance with the approved Final Engineering plans, and to determine if minimum construction and material standards are achieved. If the developer or contractor desires to deviate from the approved plan or does not feel that minimum construction standards are being satisfied, he/she is responsible for contacting the Village immediately. The Village of South Elgin will not accept a substandard product, and will not be responsible for any additional cost incurred by the developer / contractor as a result.

NOTE: ***Village of South Elgin personnel may only operate public water main facilities. The contractor is not permitted to open, close, or adjust any public water valve for any reason. If an emergency situation arises, the contractor shall contact the Village of South Elgin Public Works Department immediately.***

1. Required Testing: The following is a list of tests, which shall be required for water distribution system improvements in the Village of South Elgin. A representative of the Village of South Elgin Public Works Department shall supervise all tests. All tests shall be scheduled 48-hours in advance.

a. After a water main has been installed and before the water main has been placed into operation, the contractor shall "bag" or cover fire hydrants. The bag shall not be removed until after the main has become operational. All hydrants shall be placed to face the road.

b. Flushing: Flushing of all water system improvements will be performed to create a minimum pipeline velocity of 2.5'/per second.

c. All tests shall be scheduled 48 hours in advance.

d. Disinfection: All water mains shall pass a disinfection test in conformance with AWWA C65186. The following test criteria shall be met:

i. 50-ppm initial chlorine concentration (chlorine gas only)
ii. 25-ppm residual chlorine concentration (after 24-hour duration). Sample must be extracted under the supervision of a Village of South Elgin representative and analyzed by a laboratory of the Villages choice.
iii. Sampling will be performed on two consecutive days, 24-hours apart.

e. Leakage Test: All public water main improvements shall pass a leakage test in conformance with AWWA C-600 and C-603. Allowable leakage in gallons per hour may not exceed that determined by the following formula:

$$L = \frac{ND\sqrt{P}}{7400}$$

L = Allowable leakage in gallons per hour
N = Number of joints in length of tested main
D = Nominal inside diameter of pipe in inches
P = Average test pressure in psi

f. Pressure Test:
All public water main improvements shall pass a pressure test in conformance with the requirements of ANSI/AWWA C600-87 Section 4, and the Testing requirements shall follow the "Standard Specifications for Water and Sewer Main Construction in Illinois", latest edition.

The contractor shall, after installation of the water main system or parts thereof, pressure test and chlorinate the new system. A 1-hour pre-test must be made and passed by the Contractor before scheduling the pressure test with the Village. The main shall then be pressure tested at 150 PSI for a duration of 1-hours in the presence of a representative of the Village of South Elgin Public Works Department. If a scheduled

pressure test does not pass because of the failure of the Contractor to hold a pre-test, the Village may charge a re-inspection fee to the Contractor. Any other water main work will be halted until the re-inspection fees have been paid.

After a successful pressure test, the main shall be chlorinated by gas injection method only, by a qualified technician. Samples shall be taken on 2 consecutive working days, Monday through Thursday, 24-hours after chlorination, and after the main has been flushed. A Village representative shall determine the number of samples taken. A Village of South Elgin representative must be present for the pressure testing, chlorination, flushing, and drawing of the sample. The contractor shall bear the costs of these tests and re-inspection fees. If after four (4) samplings, the results do not yield two (2) consecutive satisfactory readings, a re-chlorination will be necessary.

Only the Village of South Elgin Public Works Department shall make the water system operational after receiving satisfactory lab reports from a qualified testing lab.

g. All private fire service lines shall pass a pressure test in conformance with the requirements of ANSI/AWWA C600-87 Section 4. The following test criteria shall be met:

i. 150 psi minimum initial test pressure
ii. 150 psi minimum residual pressure after 2-hours
iii. If an existing valve is utilized for the pressure test, the contractor is responsible for the performance of the valve
iv. Test to be observed by the Village of South Elgin Fire Protection District representative.
v. If the pressure gauge fails to 'zero' at the end of the test, the test will be failed

2. Inspections:

a. Notice: The developer or contractor shall contact the Village of South Elgin Public Works Department a minimum of 48-hours in advance of a scheduled inspection. The developer or contractor shall contact the Village of South Elgin Community Development Department a minimum of 24-hours in advance to schedule a plumbing inspection for each water service and water service tap.

b. Acceptance Inspection: Prior to Board acceptance of a public water main, the Village of South Elgin Water Division must inspect and approve the improvement. A punch list of items, which require

corrective action, will be generated, and the developer will coordinate resolution efforts and schedule a re-inspection. Following approval, the acceptance process may proceed. Acceptance proceedings will be coordinated through the Public Works Department.

c. Maintenance Inspection: Prior to the release of a maintenance guarantee, the Village of South Elgin Public Works Department must inspect and approve the condition of the water main. This inspection is performed just prior to 1-year from the date of Village Board acceptance of the improvements. This will be at the developer's request, or following notification from the financial lending institution that the expiration date for the maintenance letter of credit is approaching. A punch list of items, which require corrective action, will be generated, and the developer will coordinate resolution efforts and schedule a re-inspection. Following approval, the maintenance guarantee will be released. The release of the maintenance guarantee shall be coordinated with the Public Works Department.

d. B-Boxes: Upon completion of the project, the B-boxes will be adjusted to grade, and checked to see if they are operational without altering the shutoff key. Locations of the B-box with measurements to the property lines shall be supplied to the Public Works Department and shown on the as-built plans for the project. The Public Works Department for locating B-boxes will issue a charge. B-box locations shall be stamped on the curb/sidewalk with a "W".

C. Pavement and Roadways: Inspection of roadway and paving projects throughout the Village of South Elgin will be performed to ensure that traffic control is in place and functional, that the project is being constructed in accordance with the approved Final Engineering plans, and to determine if minimum construction and material standards are achieved. If the developer or contractor desires to deviate from the approved plan or does not feel that minimum construction standards are being satisfied, the Contractor is responsible for contacting the Village of South Elgin immediately. The Village of South Elgin will not accept a substandard product, and will not be responsible for any additional cost incurred by the developer / contractor as a result.

1. Inspections:

a. Notice: The developer or contractor shall contact the Village of South Elgin Public Works Department a minimum of 48-hours in advance of a scheduled inspection.

b. Acceptance Inspection: Prior to Board acceptance of a public roadway, the Village of South Elgin Public Works Department must inspect and

approve the improvement. A punch list of items, which require corrective action, will be generated, and the developer will coordinate resolution efforts and schedule a re-inspection. Following the Public Works Department approval, the acceptance process may proceed. New pavement will be tested by a Village appointed consultant to ensure that the structural strength of said pavement will provide a minimum of twenty (20) years of service life after acceptance. The cost for said testing shall be borne by the developer. This testing shall be completed and approved the Village immediately prior to placement of the final surface course of asphalt.

c. Curb Inspection: An inspection is required for all curb work in the public right-of-way. The contractor shall contact the Village of South Public Works Department 24-hours in advance of the scheduled pour. A Public Works representative must inspect and approve the base, forms, alignment, and location, and expansion material prior to the pour.

d. Sidewalk Inspection: An inspection is required for all public sidewalks. The contractor shall contact the Village of South Elgin Community Development Department 24-hours in advance of the scheduled pour. A Community Development Department representative must inspect and approve the sidewalk base, forms, alignment, and expansion material prior to the pour.

e. Compaction Test: Compaction tests of the sub-base, base, and surface courses of the pavement shall be made by a qualified testing lab (approved by the Village of South Elgin), and must be made in the presence of a representative of the Village of South Elgin Public Works Department. The developer/contractor shall bear the cost of the testing. The shape and thickness of the pavement base and sub-base must be checked and approved by a representative of the Village of South Elgin Public Works Department before the placement of the next course. Prior to the placement of the surface course, a preliminary punch list generated by the Village of South Elgin Public Works Department must be completed by the contractor.

f. Maintenance Inspection: Prior to the release of a maintenance guarantee, the Village of South Elgin Public Works Department will re-inspect and approve the condition of the roadway. This inspection is performed after a minimum of one year, at the developer's request, or following notification from the financial lending institution that the expiration date for the maintenance letter of credit is approaching. A punch list of items, which require corrective action, will be generated, and the developer will coordinate resolution efforts and schedule a re-

inspection. Following the Public Works Department approval, the maintenance guarantee will be released.

SECTION IX

ENGINEERING DETAILS

ENGINEERING DETAILS LISTING
The pages following this list are engineering drawing details:

CASING PIPE DETAIL

CATCH BASIN DETAIL

CONCRETE CURB & GUTTER REMOVAL and REPLACEMENT

CONCRETE CURB & GUTTER – Type B – 4.12 (SPECIAL) & Type B – 6.12 (SPECIAL)

CONCRETE GUTTER (SPECIAL)

CURB CUT DETAIL

DECORATIVE SIGN FOUNDATION DETAIL

DETECTABLE WARNING DETAIL

DETECTABLE WARNINGS – TRUNCATED DOME DETAIL

DITCH CHECK CONTROL

DRAINAGE PROTECTION

DRIVEWAYS

DROP MANHOLE DETAIL

EROSION CONTROL BLANKET (Details 1 & 2)

EROSION CONTROL BLANKET (Details 3, 5 & Staple Detail)

FIRE HYDRANT INSTALLATION

INLET PROTECTION FILTER

LIGHTING (VILLAGE CENTER - STANDARD 1)

LIGHTING (VILLAGE CENTER - STANDARD 2)

LIGHTING (VILLAGE CENTER - STANDARD 3)

LIGHTING (VILLAGE STANDARD)

P.C.C. SIDEWALK

PARK SIGN DETAIL

PIPE DRAINS 6” (SPECIAL)

PIPE OUTLET/RIPRAP DETAIL

PIPE UNDERDRAINS 4”

PVC PIPE TRENCH DETAIL

RCP & DIP TRENCH DETAIL

RECTANGULAR RAPID FLASHING BEACON ASSEMBLY (COMPLETE) DETAIL

RESTRICTOR STRUCTURE

SANITARY AND STORM SEWER MANHOLE COVER

SANITARY MANHOLE DETAIL

SANITARY SEWER CONNECTION

SANITARY SEWER SERVICE REPLACEMENT

SIDEWALK STREETSCAPE DETAIL

SIGN POST BASE COVER

SIGN POST BASE

SILT FENCE

STANDARD VALVE VAULT DETAIL

STORM MANHOLE RESTRICTOR

STREET NAME SIGN

THRUST BLOCK INSTALLATION

WATER MAIN RELOCATION DETAIL

WATER MAIN TRENCH DETAIL – (Paved Areas)

WATER MAIN TRENCH DETAIL – (Non-Paved Areas)

WATER SERVICE RECONNECTION DETAIL

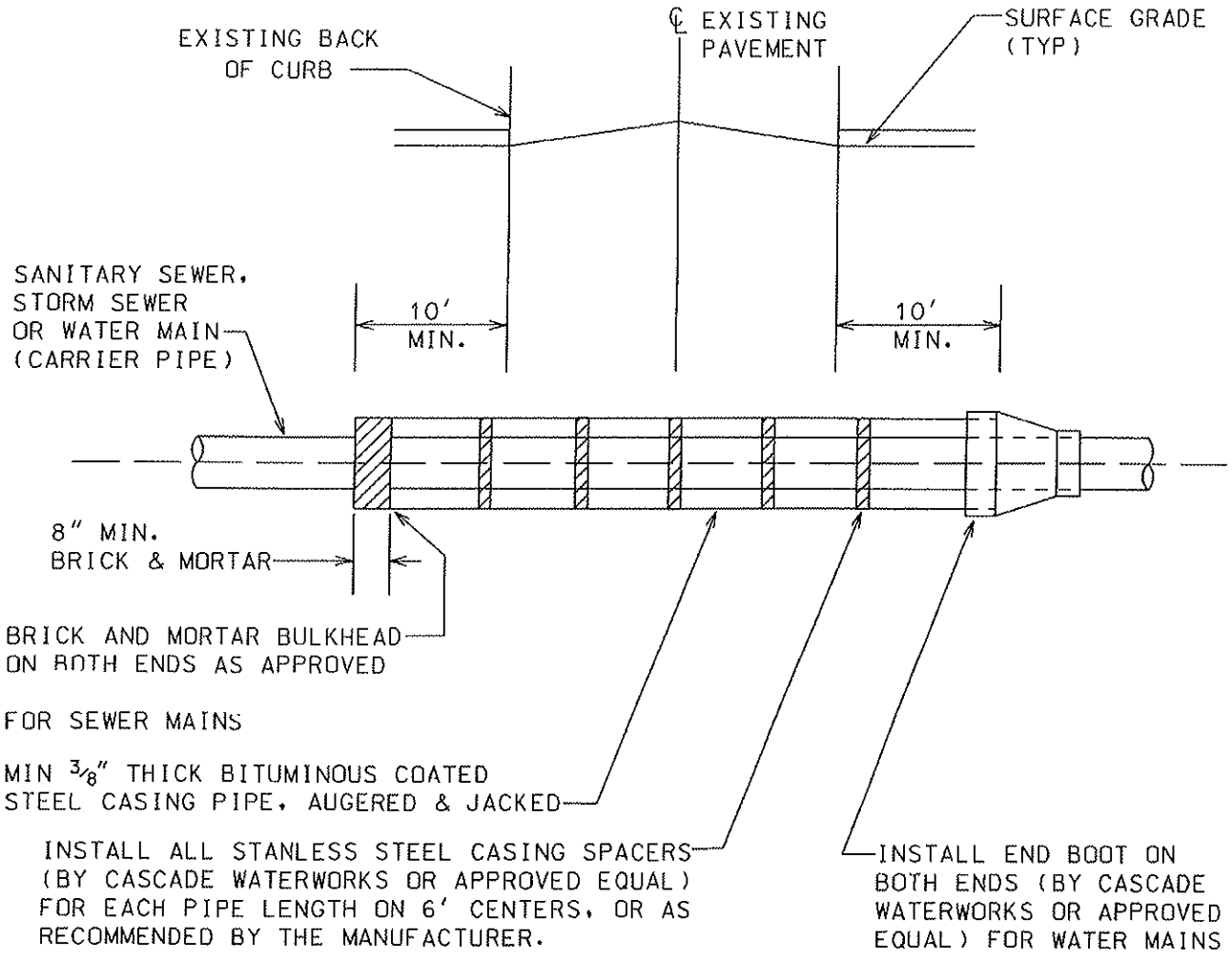

NOTES:

1. CASING PIPE IS REQUIRED UNDER ALL EXISTING ROADWAYS, OR AS OTHERWISE DIRECTED BY THE ENGINEERING DIVISION WHERE OPEN CUTS ARE NOT PERMITTED, EXCEPT FOR WATER SERVICE LINES UP TO 2″ IN DIAMETER.
2. WATER MAIN CASING SPACERS SHALL BE RESTRAINED IN POSITION.
3. THE INSIDE DIAMETER OF THE CASING PIPE SHALL BE DETERMINED BY CONTRACTOR BUT IN NO CASE SHALL IT BE LESS THAN 8″ LARGER THAN THE DIAMETER OF THE CARRIER PIPE TO ALLOW AMPLE SPACE FOR BELLS, AND CARRIER PIPE SLOPE (FOR GRAVITY PIPE).
4. ALL AUGER PITS TO BE BACKFILLED WITH IDOT CA-7 VIRGIN CRUSHED LIMESTONE MATERIAL.
5. POLY WRAPPED WATER MAIN REQUIRED IN CASING.

NOT TO SCALE

DATE: 11-12-13

CASING PIPE DETAIL

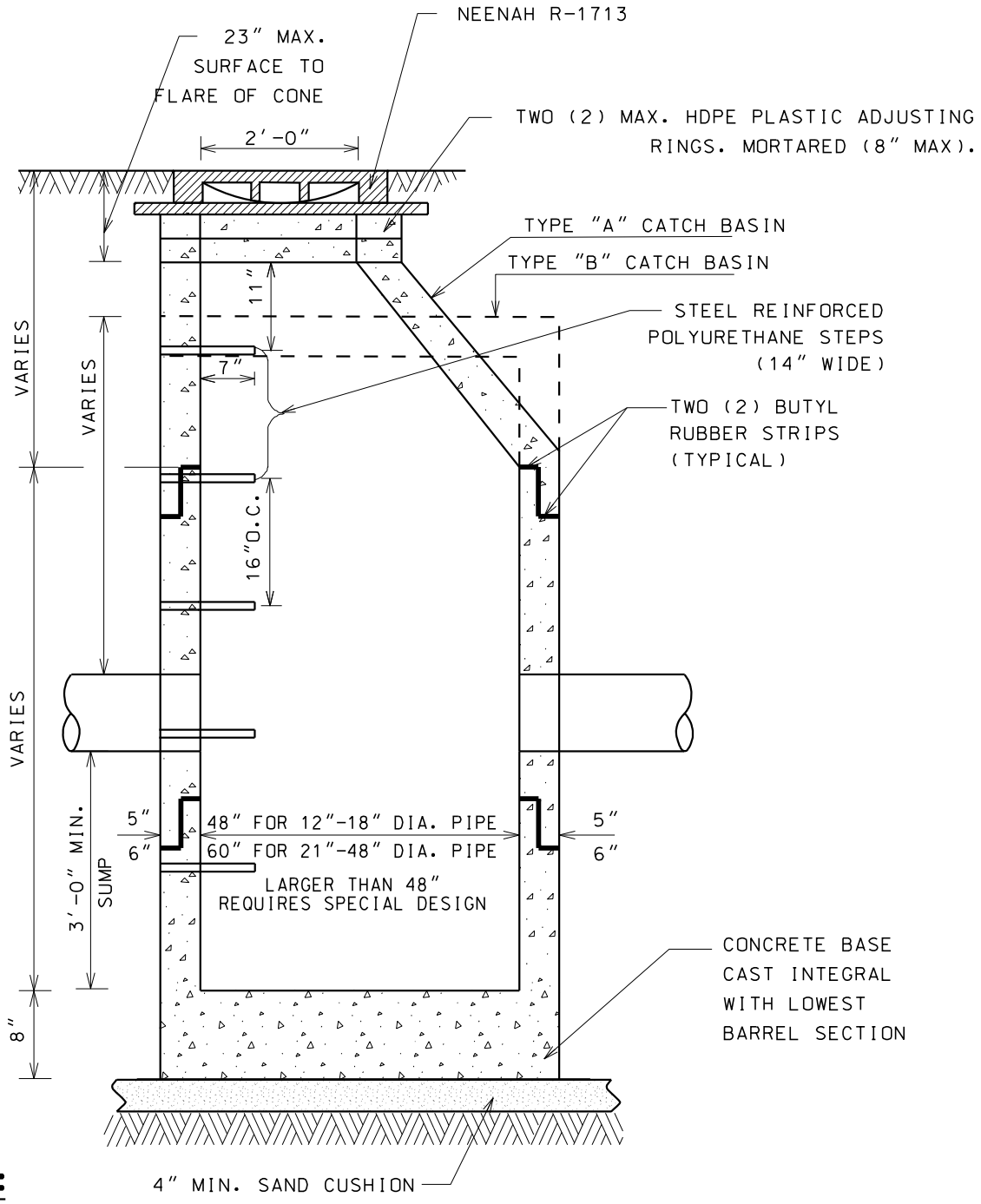

NOTES:

1. MANHOLES MUST CONFORM TO ASTM C-478.
2. MANHOLE SECTIONS TO BE TONGUE AND GROOVED.
3. NON-PRECAST OPENINGS SHALL BE CORED AND RUBBER BOOTED.
4. MORTAR ALL PENETRATIONS INSIDE AND OUTSIDE OF STRUCTURE.
5. IN "SUBMERGED" CONDITIONS, ALL PIPE PENETRATIONS TO BE CORED, RUBBER BOOTED AND INTERIOR MORTARED.
6. PRIOR TO THE PLACEMENT OF FINAL LAYER OF ROADWAY, FRAMES AND ADJUSTING RINGS LOCATED WITHIN PAVED AREAS SHALL BE SET IN AN IDOTAPPROVED CONCRETE "S1" MIXTURE.

VILLAGE OF SOUTH ELGIN

REV 09-09-14
NOT TO SCALE

TYPE A & B CATCH BASIN DETAIL

9/9/2014 \\corp.baxwood.com\Projects\CrystalLake\SELGV\40480-VIIStd Details\CADD\Details_01_01_14_ for village.dgn

NOTE: PROPOSED CURB TO MATCH EXISTING CURB TYPE. (VARIES FROM TYPE M3-12 TO B6-12)

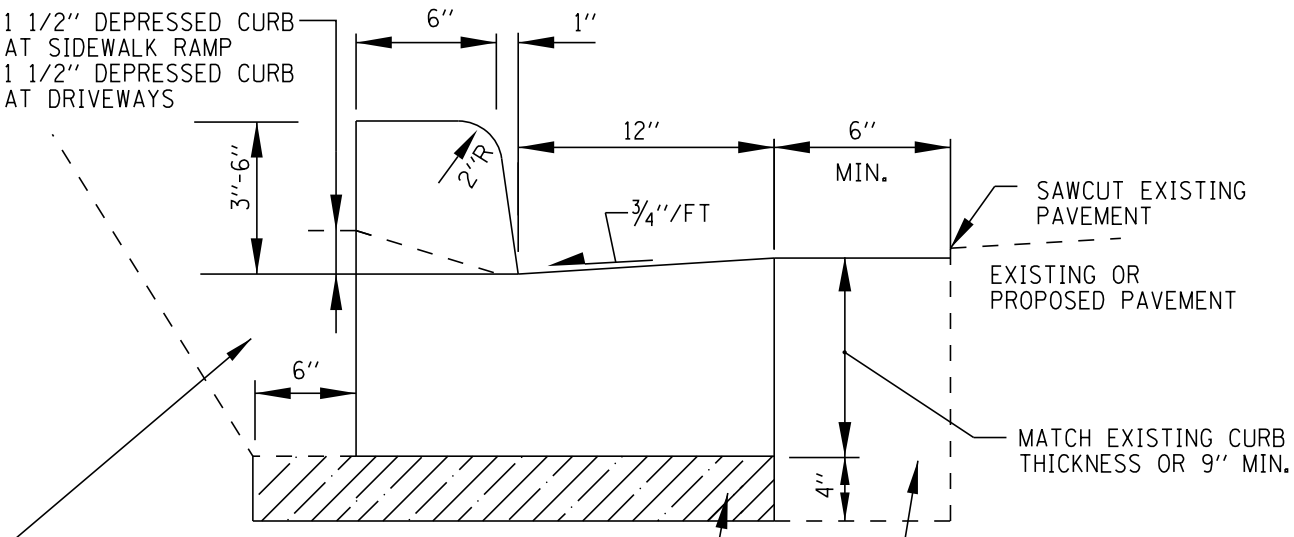

PARKWAY SHALL BE BACKFILLED WITH SAND OR MATERIAL APPROVED BY THE ENGINEER AND SHALL BE INCLUDED IN THE CURB AND GUTTER CONSTRUCTION. DRIVEWAYS SHALL BE BACKFILLED WITH AN APPROVED GRANULAR MATERIAL AS TEMPORARY PAVEMENT AND SHALL BE PAID FOR AS TEMPORARY AGGREGATE.

CA-6 CRUSHED MATERIAL (INCLUDED IN CURB AND GUTTER CONSTRUCTION)

BACKFILL WITH CA-6 CRUSHED STONE OR GRAVEL FOR STREETS TO BE RECONSTRUCTED OR CLASS SI CONCRETE FOR STREETS TO BE OVERLAID. (CONCRETE TO BE LEFT 2 1/2" BELOW GUTTER FLAG) AGGREGATE OR CONCRETE BACKFILL SHALL BE INCLUDED IN THE GUTTER CONSTRUCTION.

NOTES:

1. PROVIDE A ONE-INCH EXPANSION JOINT EVERY 60 FEET AND AT ALL STRUCTURES.
2. PROVIDE CONTRACTION JOINTS EVERY 15 FEET TO A DEPTH OF 2 INCHES AND AT ALL POINTS OF CURVATURE.
3. STAMP CURB WITH "S", "W" AND "ST" AT SANITARY, WATER AND STORM SERVICE LOCATIONS.

VILLAGE OF SOUTH ELGIN

REV 09-09-14
NOT TO SCALE

COMBINATION CONCRETE CURB AND GUTTER REMOVAL AND REPLACEMENT

9/9/2014 \\corp.baxwood.com\Projects\CrystalLake\SELGV\40480-VIIStd Details\CADD\Details_01_01_14_ for village.dgn

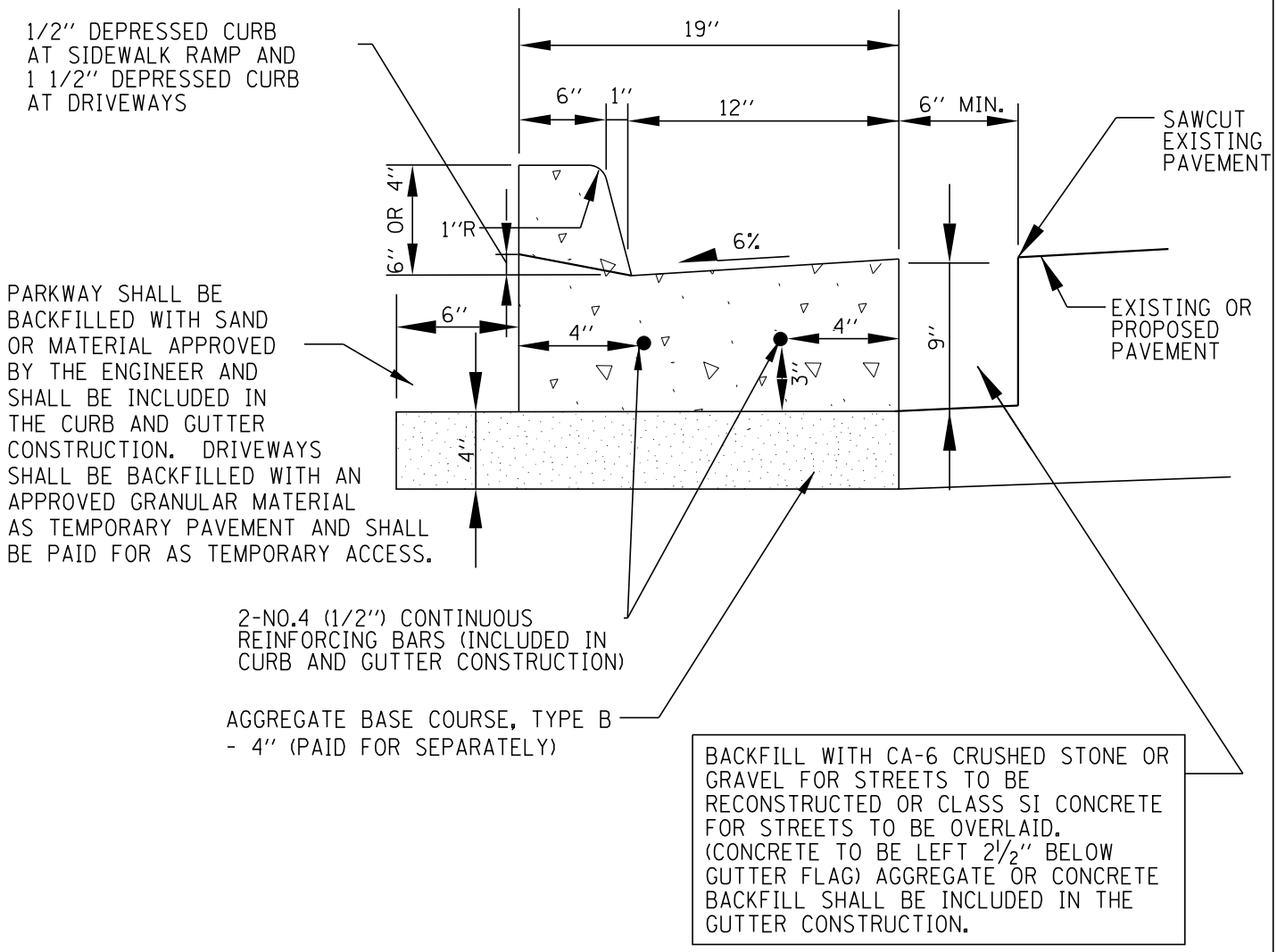

VILLAGE OF SOUTH ELGIN

REV 01/01/14
NOT TO SCALE

COMBINATION CONCRETE CURB & GUTTER TYPE B–4.12 (SPECIAL) AND TYPE B–6.12 (SPECIAL)

4/30/2014 I:\CrystalLake\SELGV\140480-VIIStd Details\CADD\Details_01_01_14.dgn

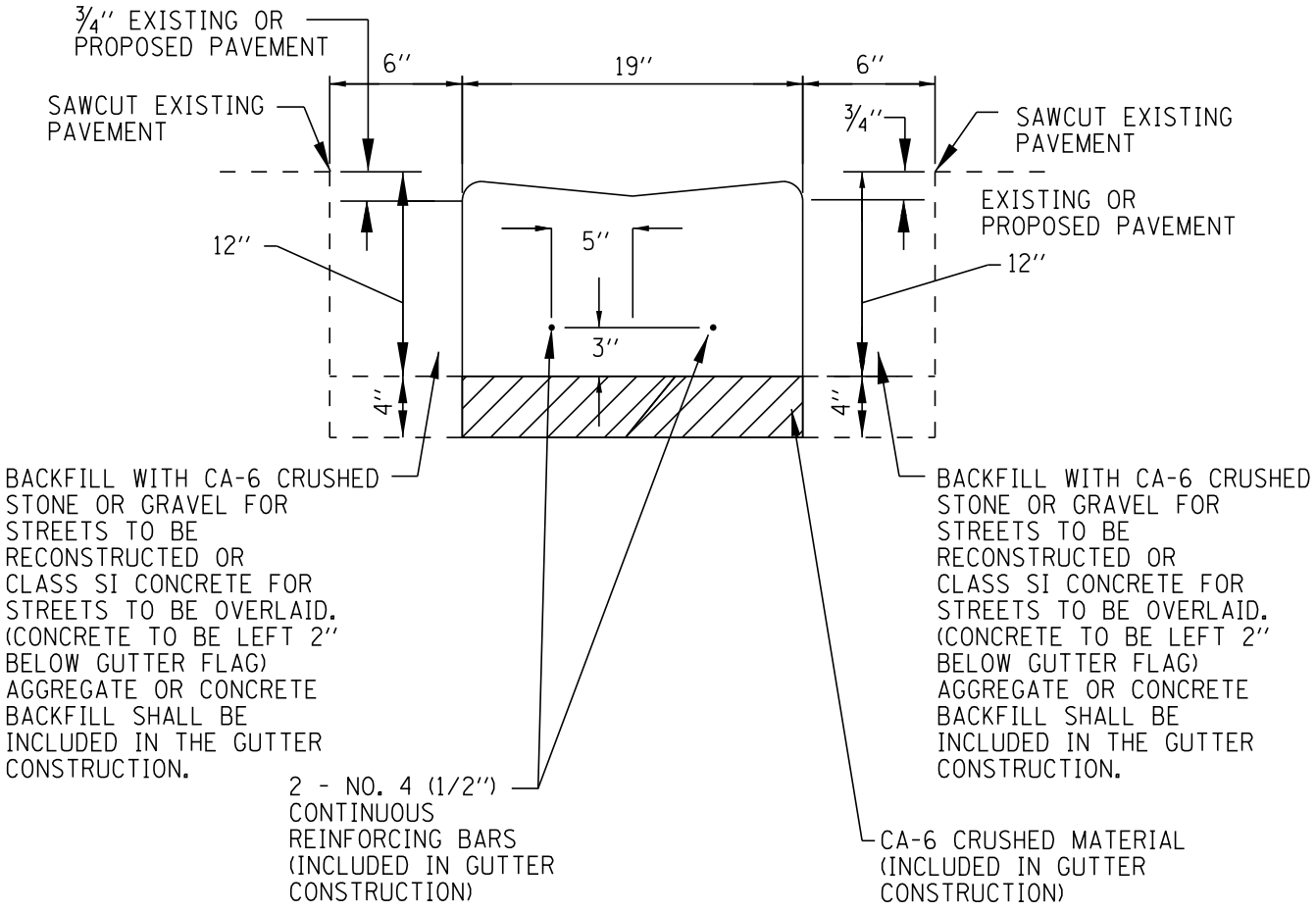

VILLAGE OF SOUTH ELGIN

REV 01/01/14
NOT TO SCALE

CONCRETE GUTTER (SPECIAL)

4/30/2014 I:\CrystalLake\SELGV\140480-VIIStd Details\CADD\Details_01_01_14.dgn

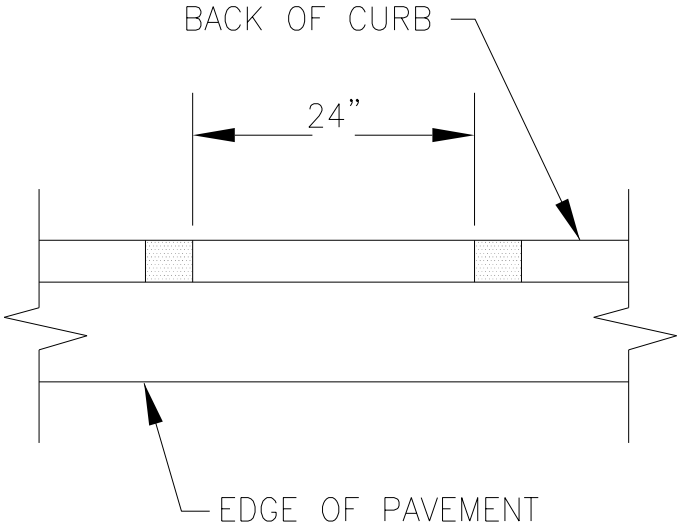

CURB CUT
PLAN

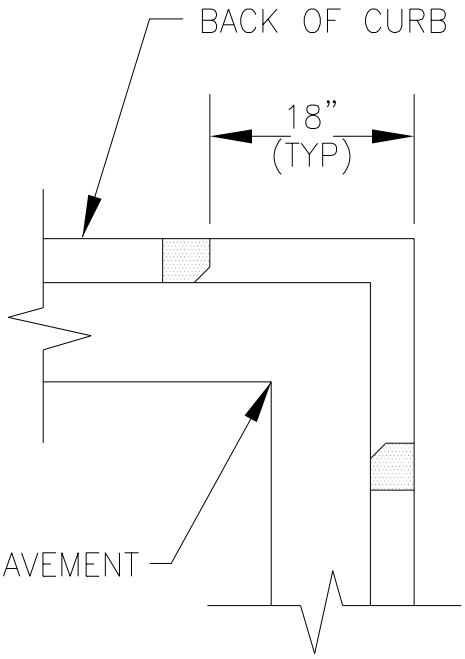

CURB CUT CORNER
PLAN

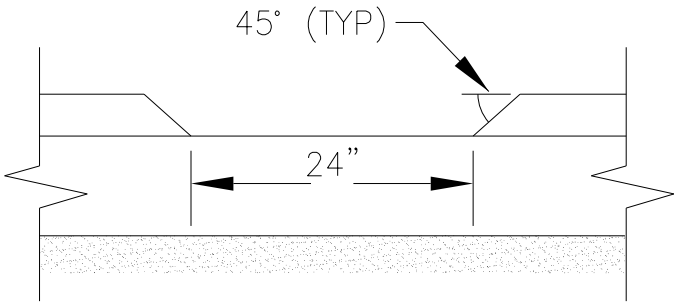

SECTION

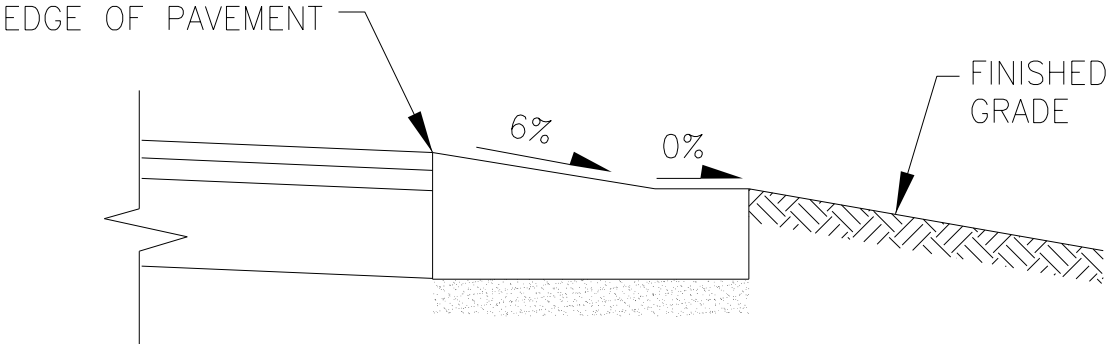

SECTION

NOTE: GRADES GIVEN AT CURB CUT LOCATIONS REFLECT TOP BACK OF CURB EXTENDED. NOT FLOW LINE ELEVATION.

VILLAGE OF SOUTH ELGIN

REV 01/01/14
NOT TO SCALE

CURB CUT DETAIL

4/30/2014 I:\Crystal Lake\SELGV\140480-VIIStd Details\CADD\Details_01_01_14.dgn

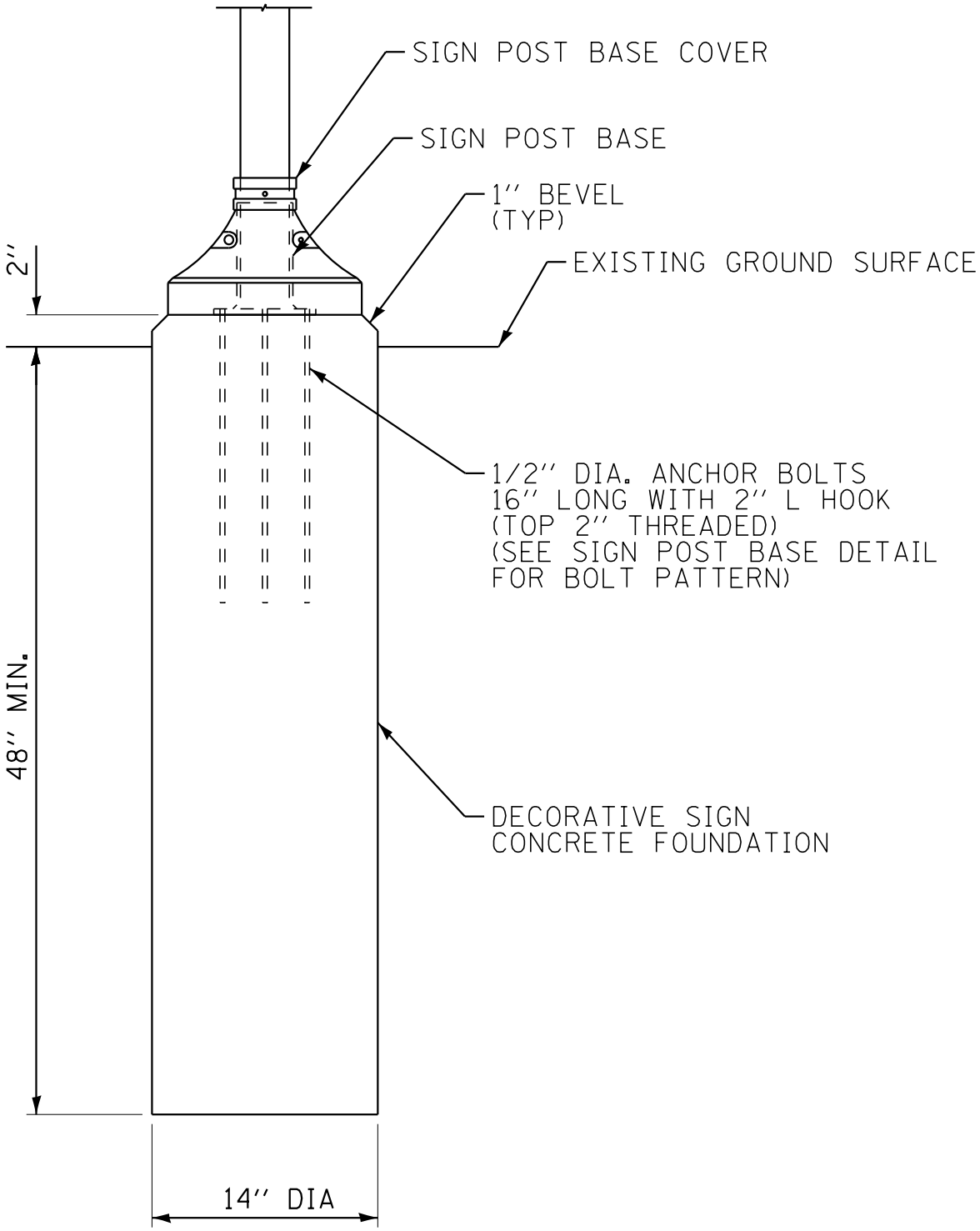

THE VILLAGE OF SOUTH ELGIN
Where tradition meets the future

REV 09/30/14
NOT TO SCALE

DECORATIVE SIGN FOUNDATION DETAIL

10/3/2014 I:\Crystal Lake\SELGV\140480-VIIStd Details\CADD\Details_01_01_14.dgn

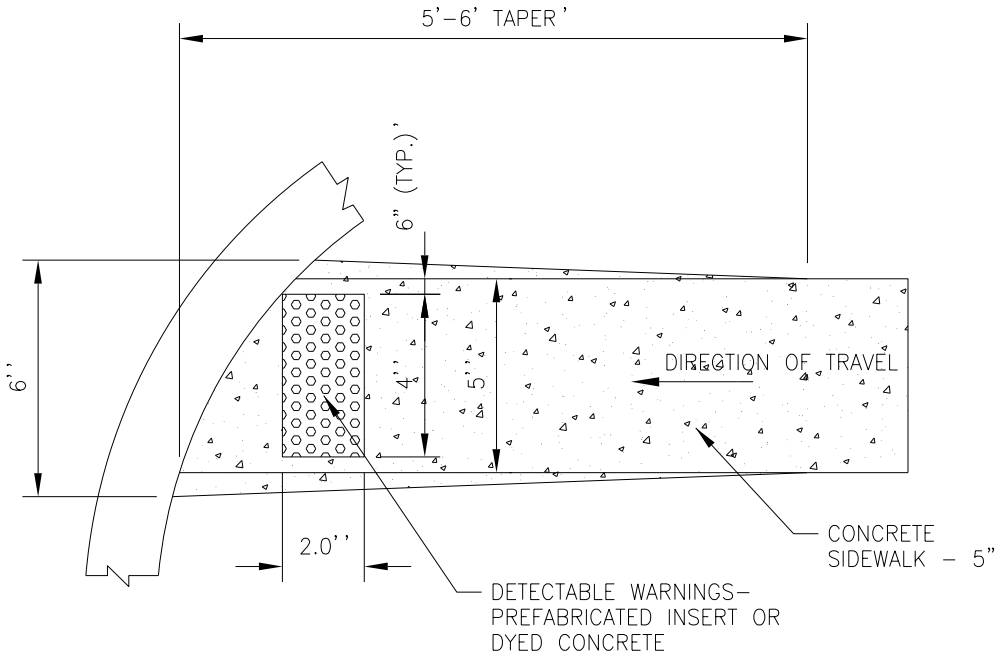

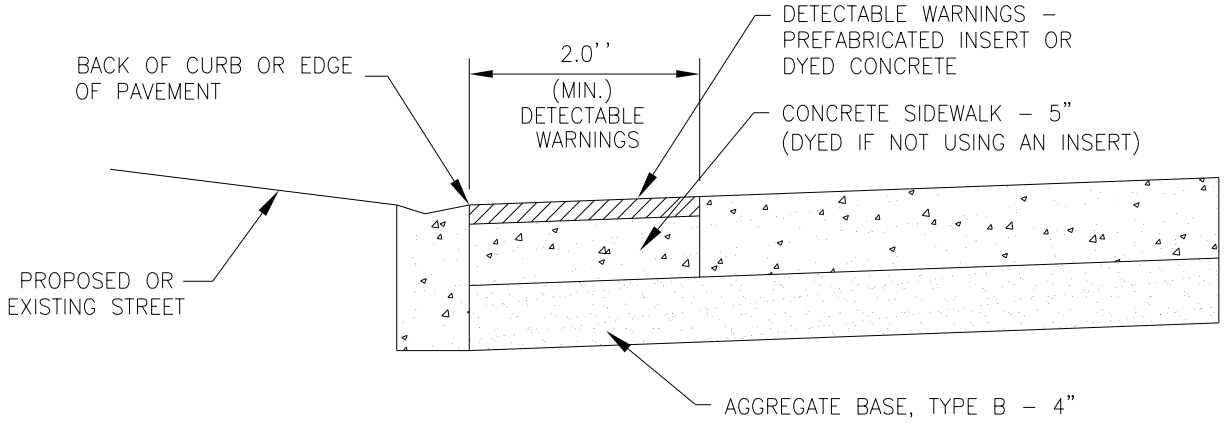

NOTE:
SEE IDOT STANDARD DETAILS OR PROWAG FOR
ALTERNATE CONFIGURATIONS.

VILLAGE OF SOUTH ELGIN

REV 09-09-14
NOT TO SCALE

DETECTABLE WARNING DETAIL

9/9/2014 \\corp.baxwood.com\Projects\CrystalLake\SELGV\40480-VillStd Details\CADD\Details_01_01_14_ for village.dgn

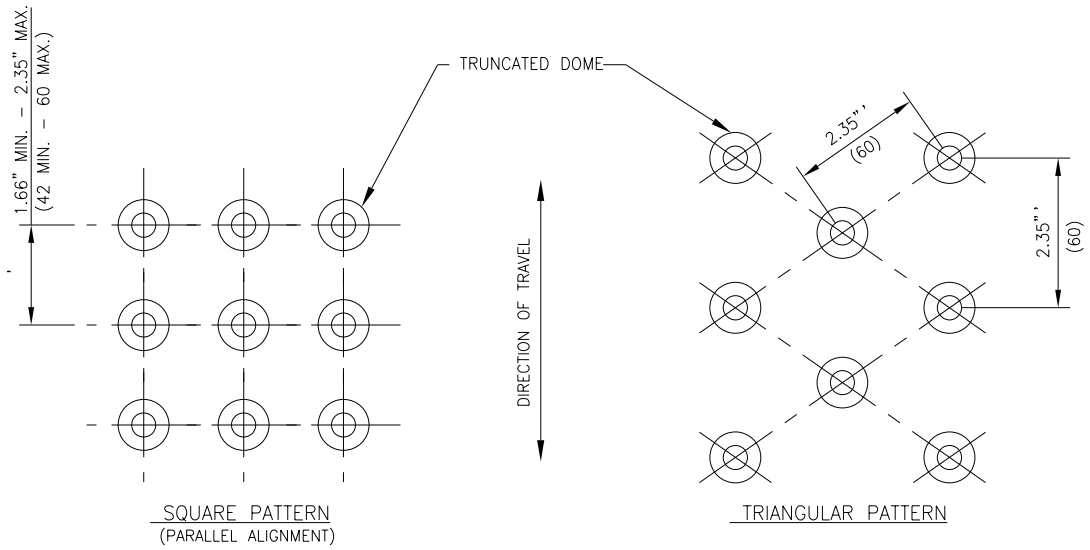

DETECTABLE WARNINGS–TRUNCATED DOME DETAIL

NO SCALE

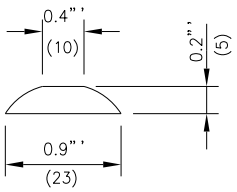

TRUNCATED DOME DETAIL

VILLAGE OF SOUTH ELGIN

REV 01/01/14
NOT TO SCALE

DETECTABLE WARNINGS–TRUNCATED DOME DETAIL

4/30/2014 I:\Crystal Lake\SELGV\140480-VIIStd Details\CADD\Details_01_01_14.dgn

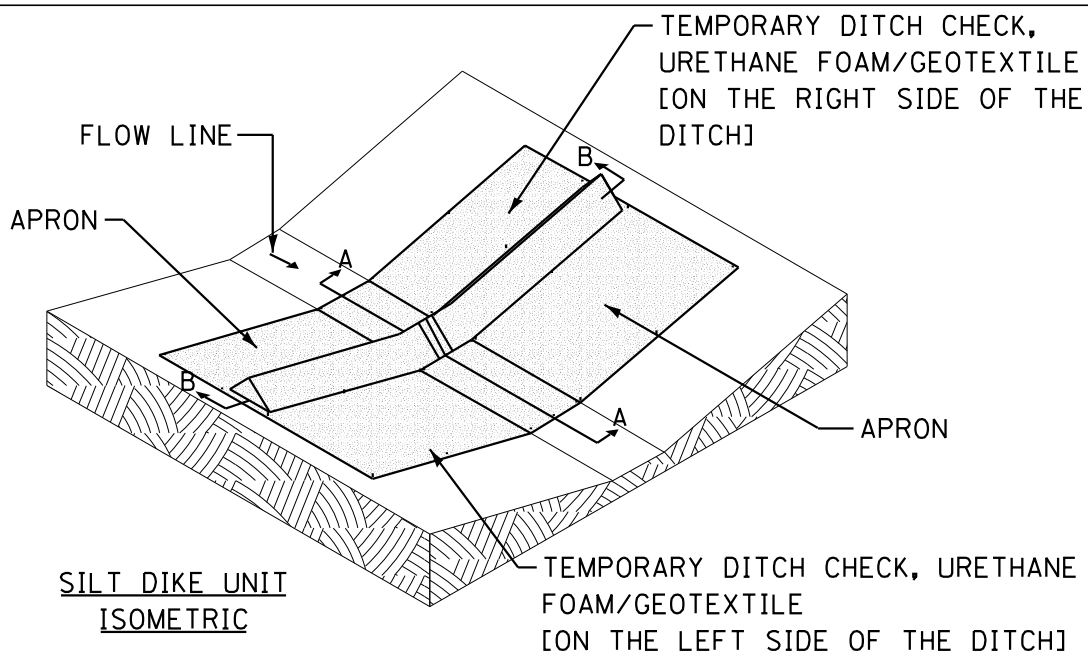

SILT DIKE UNIT
ISOMETRIC

NOTES:
THE INSTALLATION SHOWN ABOVE WILL BE MEASURED FOR PAYMENT IN FEET PERPENDICULAR TO THE FLOW LINE.

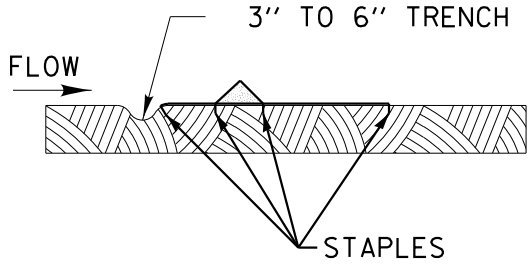

SECTION A-A

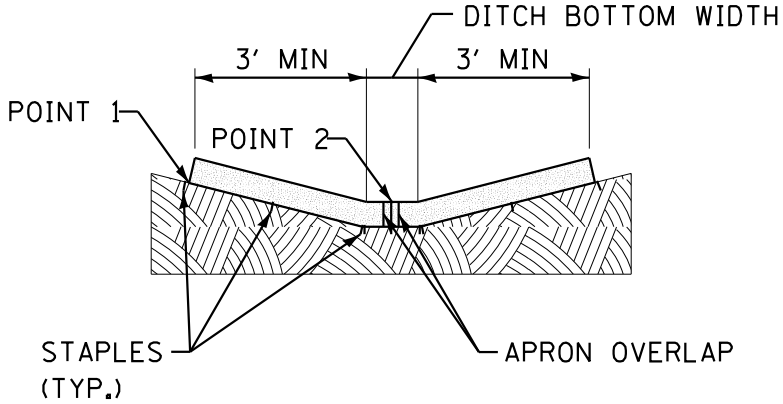

SECTION B-B

STAPLES SHALL BE PLACED WHERE THE UNITS OVERLAP AND IN THE CENTER OF THE DITCH AS SHOWN ON THE DIAGRAM.

POINT 1 MUST BE HIGHER THAN POINT 2 TO INSURE THAT WATER FLOWS OVER THE DIKE AND NOT AROUND THE ENDS.

VILLAGE OF SOUTH ELGIN

REV 01/01/14
NOT TO SCALE

TEMPORARY DITCH CHECK

4/30/2014 I:\Crystal Lake\SELGV\140480-VIIStd Details\CADD\Details_01_01_14.dgn

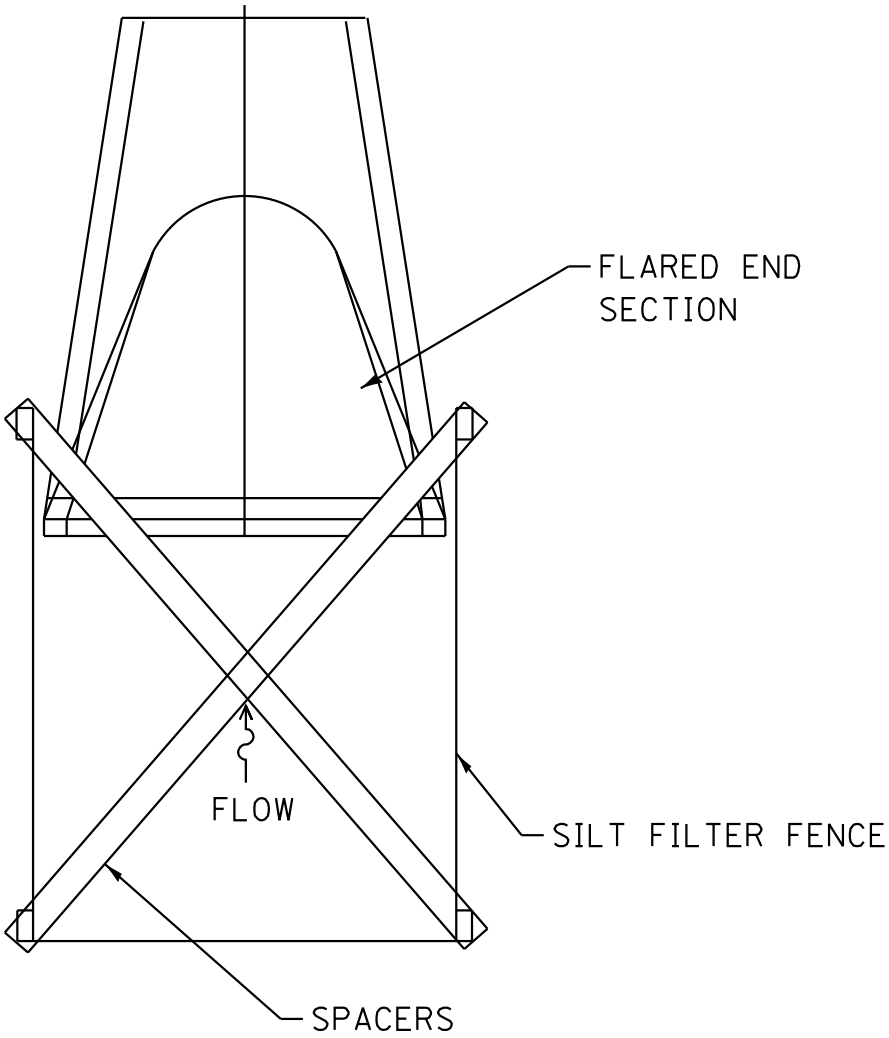

*INSTALL PER IDOT STANDARD 280001-05

VILLAGE OF SOUTH ELGIN

REV 01/01/14
NOT TO SCALE

DRAINAGE PROTECTION

4/30/2014 I:\CrystalLake\SELGV\140480-VIIStd Details\CADD\Details_01_01_14.dgn

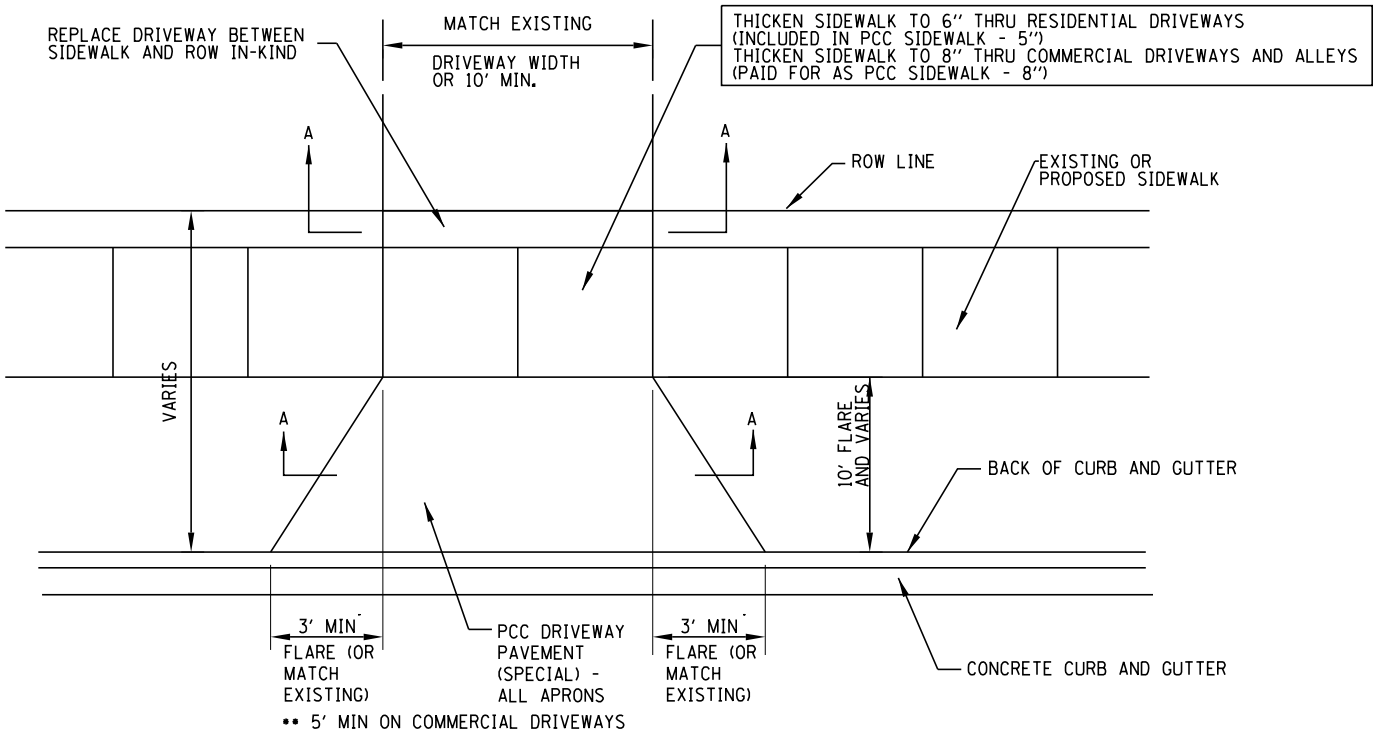

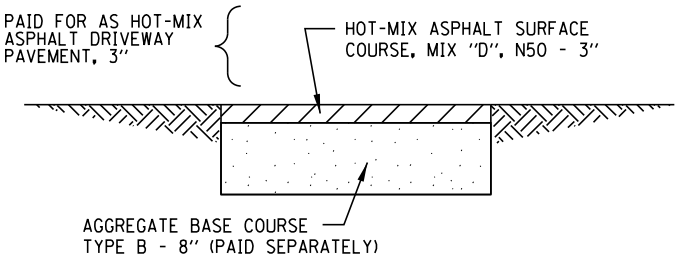

SECTION A-A

(BETWEEN SIDEWALK AND ROW ONLY)

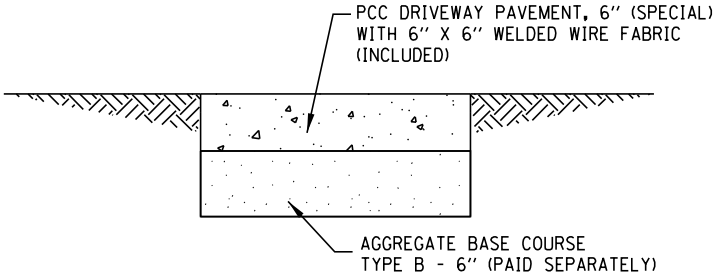

SECTION A-A

RESIDENTIAL

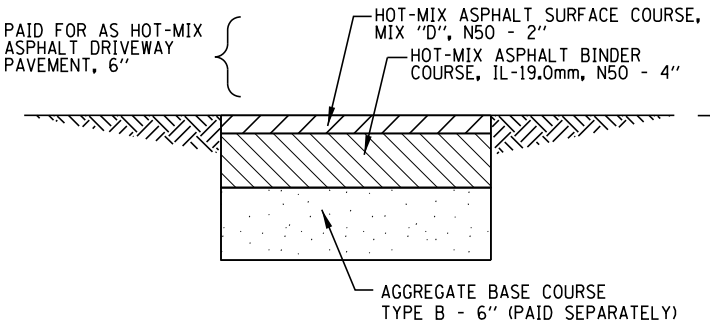

SECTION A-A

(BETWEEN SIDEWALK AND ROW ONLY)

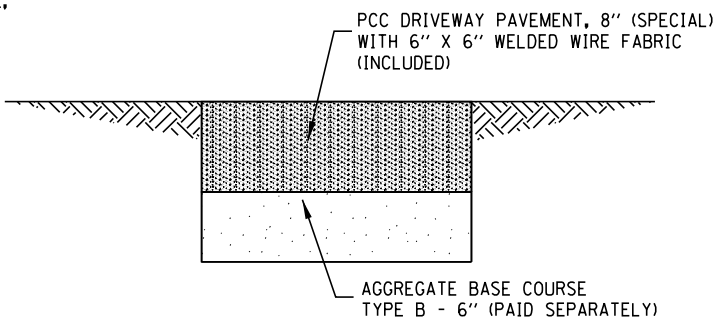

SECTION A-A

COMMERCIAL & ALLEYS

VILLAGE OF SOUTH ELGIN

REV 01/01/14
NOT TO SCALE

DRIVEWAYS

4/30/2014 I:\Crystal Lake\SELGV\140480-VIIIStd Details\CADD\Details_01_01_14.dgn

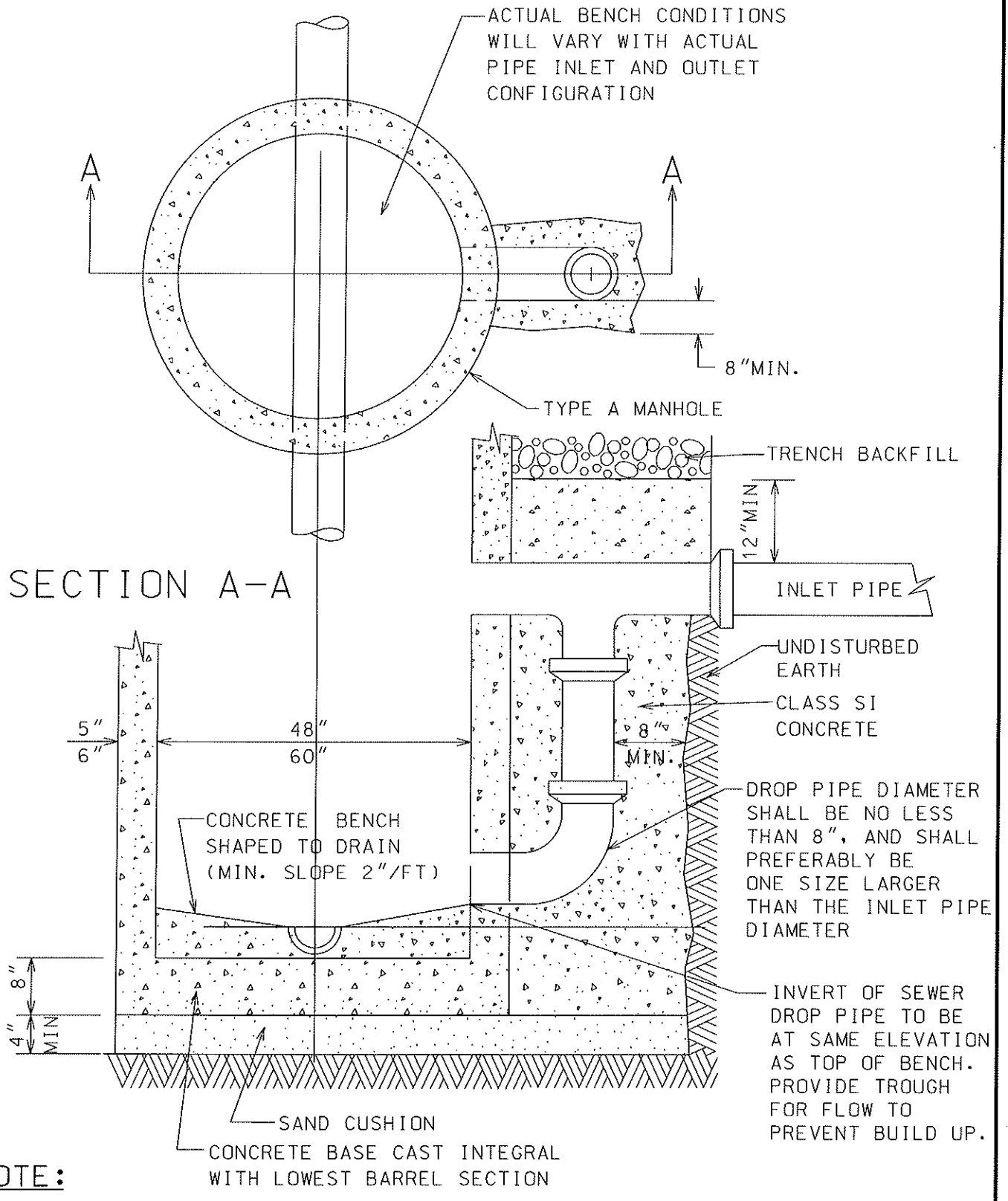

NOTE:

1. DROP MANHOLE WILL BE REQUIRED WHERE DIFFERENCE BETWEEN INVERT ELEVATION OF INLET AND DOWNSTREAM PIPE IS GREATER THAN 12".

2. NON-PRECAST OPENINGS SHALL BE CORED AND RUBBER BOOTED.

NOT TO SCALE

DATE: 3-31-09

DROP MANHOLE DETAIL

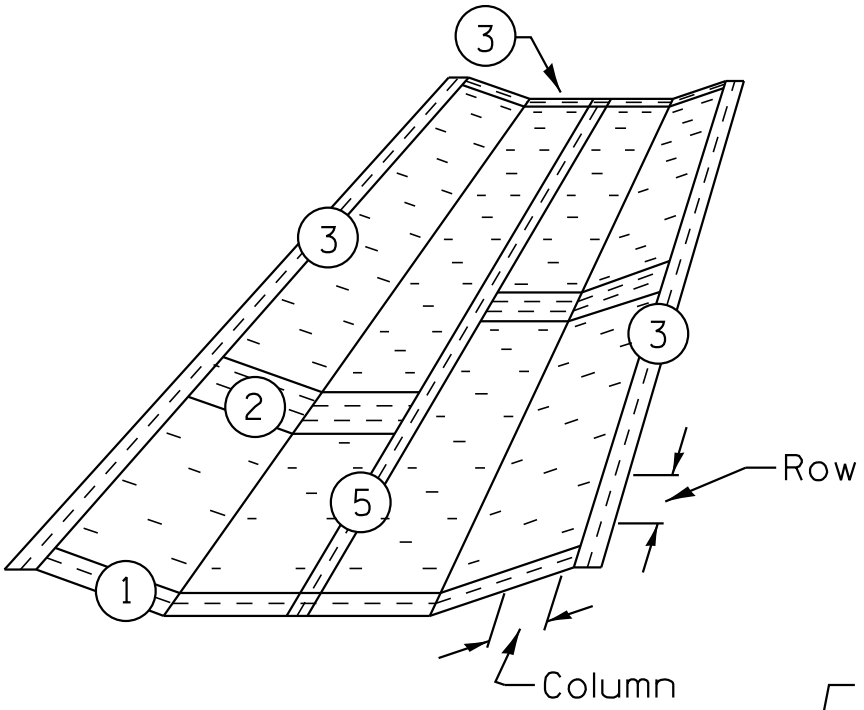

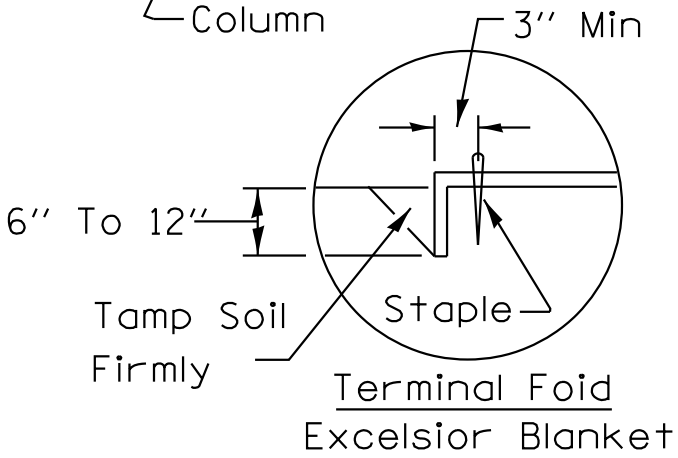

DETAIL 1

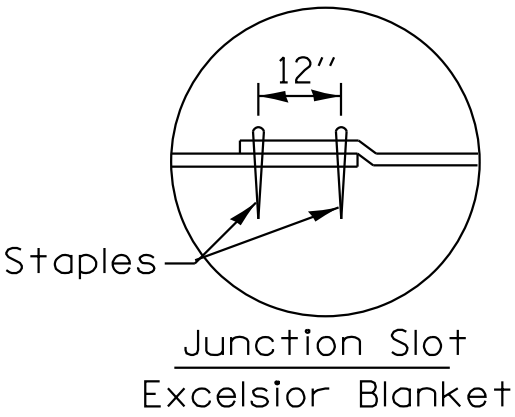

DETAIL 2

VILLAGE OF SOUTH ELGIN

REV 01/01/14
NOT TO SCALE

EROSION CONTROL BLANKET

4/30/2014 I:\Crystal Lake\SELGV\140480-VIIStd Details\CADD\Details_01_01_14.dgn

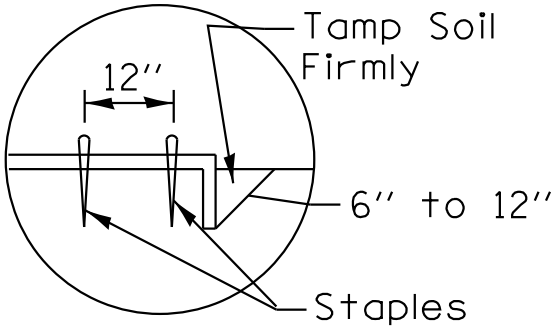

Anchor Slot
Excelsior Blanket

DETAIL 3

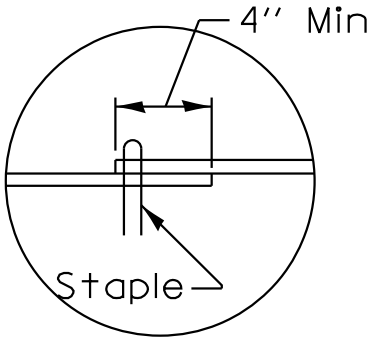

Lap Joint
Excelsior Blanket shall be bitted together

DETAIL 5

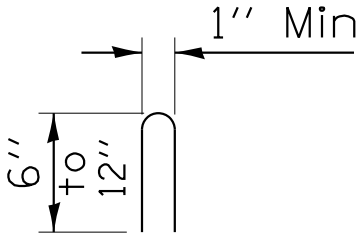

STAPLE DETAIL

NOTES:

1. Staples are to be placed alternately, in columns approximately 2' apart and in rows approximately 3' apart. Approximately 175 staples are required per 4'x225' roll of material and 125 staples are required per 4'x150' roll of material.

2. Erosion control materials shall be placed loosely over ground surface. Do not stretch.

3. All terminal ends and transverse laps shall be stapled at approximately 2'' intervals.

VILLAGE OF SOUTH ELGIN

REV 01/01/14
NOT TO SCALE

EROSION CONTROL BLANKET

I:\Crystal Lake\SELGV\140480-VIIStd Details\CADD\Details_01_01_14.dgn
4/30/2014

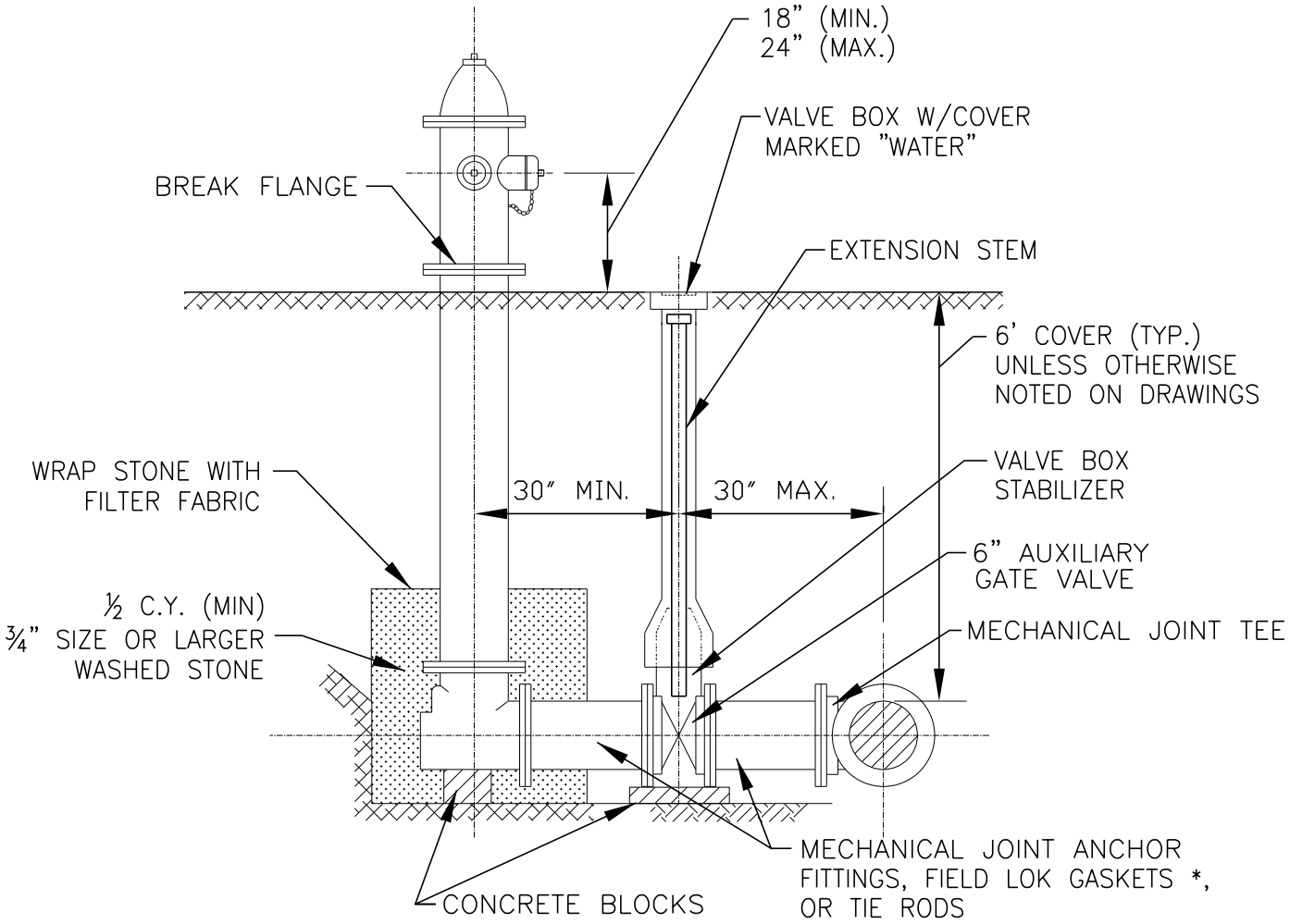

* NOTE: MECHANICAL JOINT FITTINGS ARE NOT REQUIRED WHERE FIELD LOK GASKETS ARE UTILIZED.

VILLAGE OF SOUTH ELGIN

REV 01/01/14
NOT TO SCALE

FIRE HYDRANT INSTALLATION

I:\Crystal Lake\SELGV\140480-VIIStd Details\CADD\Details_01_01_14.dgn
4/30/2014

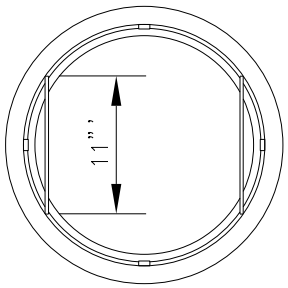

PLAN

SECTION

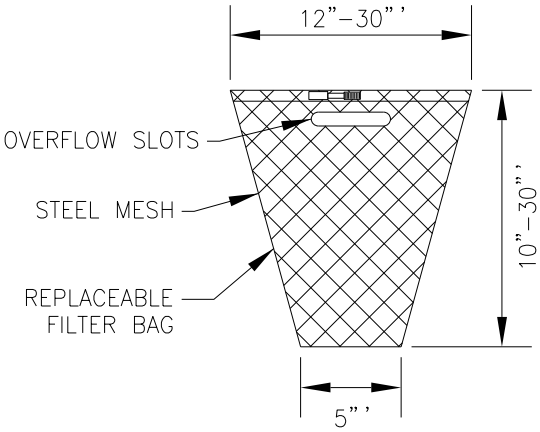

GENERAL NOTES:

FRAME: TOP RING CONSTRUCTED FROM 1 1/4" x 1 1/4" x 1/8" ANGLE. BASE RING CONSTRUCTED OF 1 1/2" x 1/2" x 1/8" CHANNEL. HANDLES & SUSPENSION BRACKETS CONSTRUCTED FROM 1/4" x 1 1/4" FLAT. ALL STEEL CONFORMING TO ASTM-A36.

REPLACEABLE BAG: CONSTRUCTED FROM 4 OZ./SQ. YD. NON-WOVEN POLYPROPYLENE GEOTEXTILE REINFORCED WITH POLYESTER MESH. CONNECTED TO BASE RING WITH STAINLESS STEEL STRAP & LOCK.

STEEL MESH: REMOVABLE STAINLESS STEEL MESH STRAINER BASKET. 1/4" DIA. HOLE SIZE, 58% OPEN AREA.

VILLAGE OF SOUTH ELGIN

REV 01/01/14
NOT TO SCALE

INLET PROTECTION FILTER

4/30/2014 I:\Crystal Lake\SELGV\140480-VIIStd Details\CADD\Details_01_01_14.dgn

LIGHTING (VILLAGE CENTER STANDARD 1)

PHILIPS
LUMEC
640, Curé-Boivin
Boisbriand (Québec)
Canada, J7G 2A7

Presentation

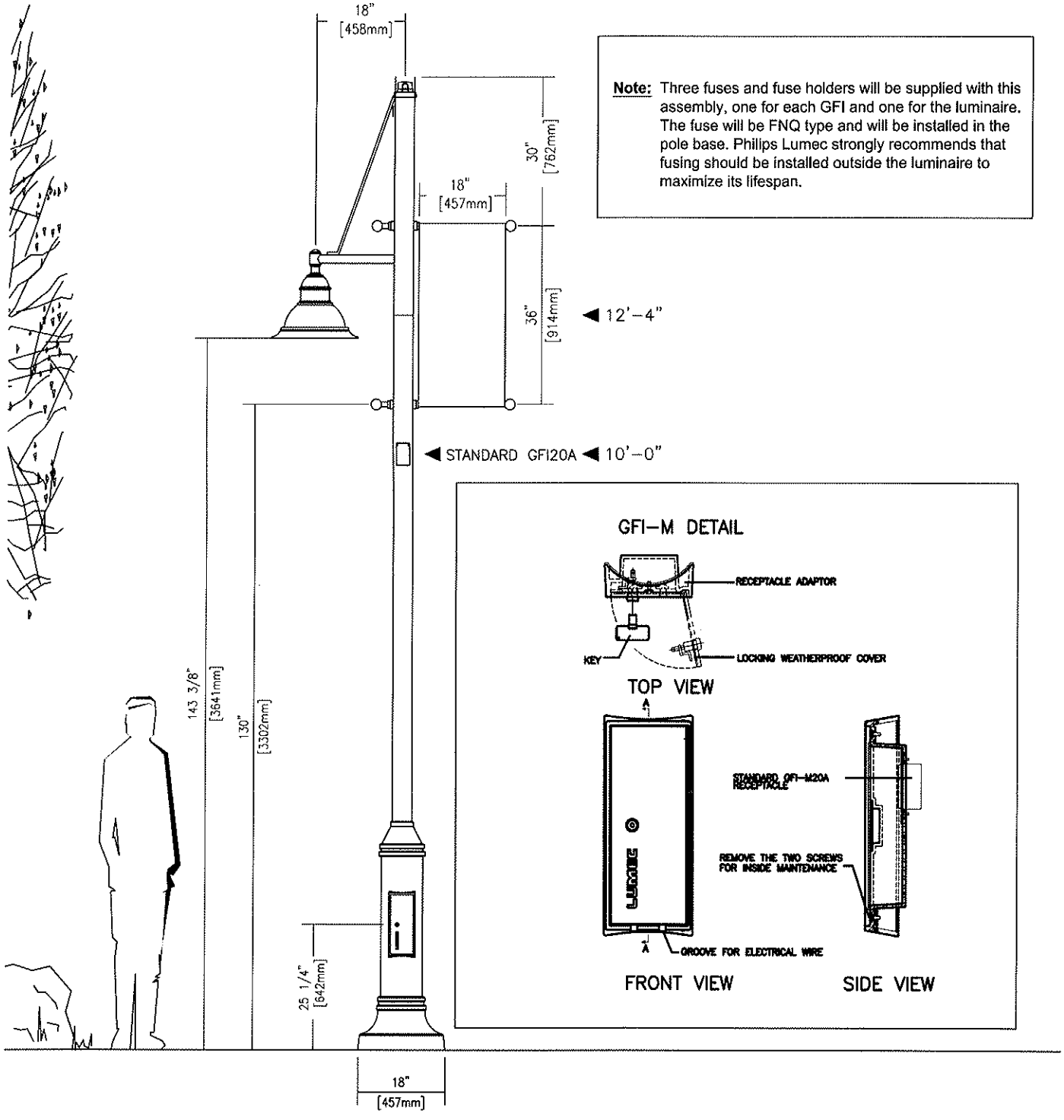

Note: Three fuses and fuse holders will be supplied with this assembly, one for each GFI and one for the luminaire. The fuse will be FNQ type and will be installed in the pole base. Philips Lumec strongly recommends that fusing should be installed outside the luminaire to maximize its lifespan.

South Elgin Village of (47589)

Type: Single DOS DOS-40W30LED4K-ES-LE3F-120-[DBG-003]-1A-270deg-[BA-063]-PH8/120-AM8U-12.33-BAS18-[FS1-001]-GFI20AI-GFI-M20A-3/4x20-12 1/2-DEC-BKTX DOS-TA-LCP56743 REV.1-47589-172-MA 20120920_113422.DOC

LIGHTING (VILLAGE CENTER STANDARD 2)

PHILIPS
LUMEC

640, Curé-Boivin
Boisbriand (Québec)
Canada, J7G 2A7

Presentation

Note: Three fuses and fuse holders will be supplied with this assembly, one for each GFI and one for the luminaire. The fuse will be FNQ type and will be installed in the pole base. Philips Lumec strongly recommends that fusing should be installed outside the luminaire to maximize its lifespan.

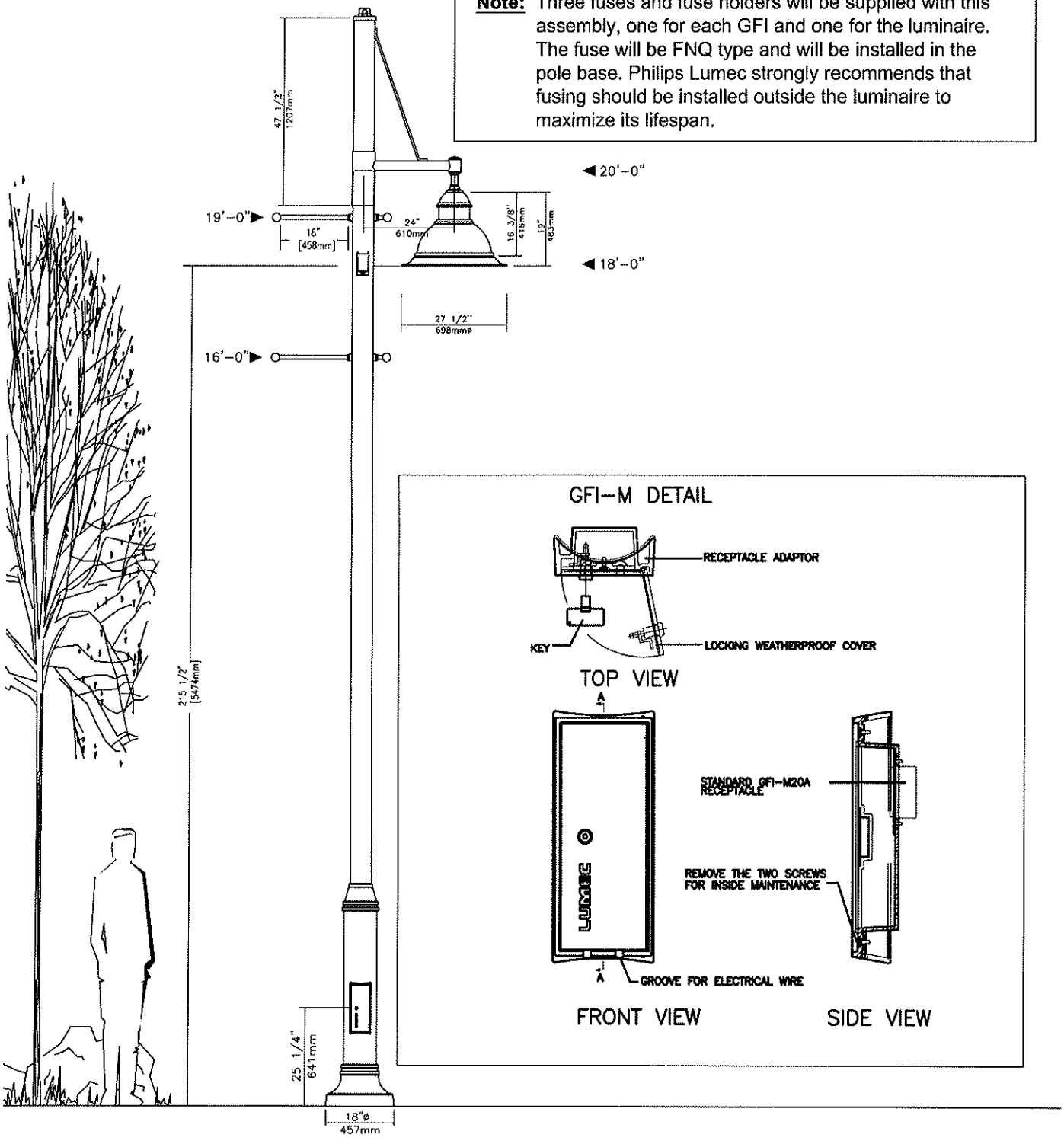

South Elgin Village of (47589)

Type: Single DMS50 DMS50-90W80LED4K-ES-LE3F-120-PC-1A-90deg-PH8/120-SAM8V-20-BAS18(2)-[FS1-001]-GFI20AI-GFI-M20A-1X36-12 1/2-DEC-BKTX DMS50-TA-LCP56520 REV.1-47589-171-MA 20120920_084245.DOC

LIGHTING (VILLAGE CENTER STANDARD 3)

PHILIPS
LUMEC
640, Curé-Boivin
Boisbriand (Québec)
Canada, J7G 2A7

Presentation

Note: Three fuses and fuse holders will be supplied with this assembly, one for each GFI and one for the luminaire. The fuse will be FNQ type and will be installed in the pole base. Philips Lumec strongly recommends that fusing should be installed outside the luminaire to maximize its lifespan.

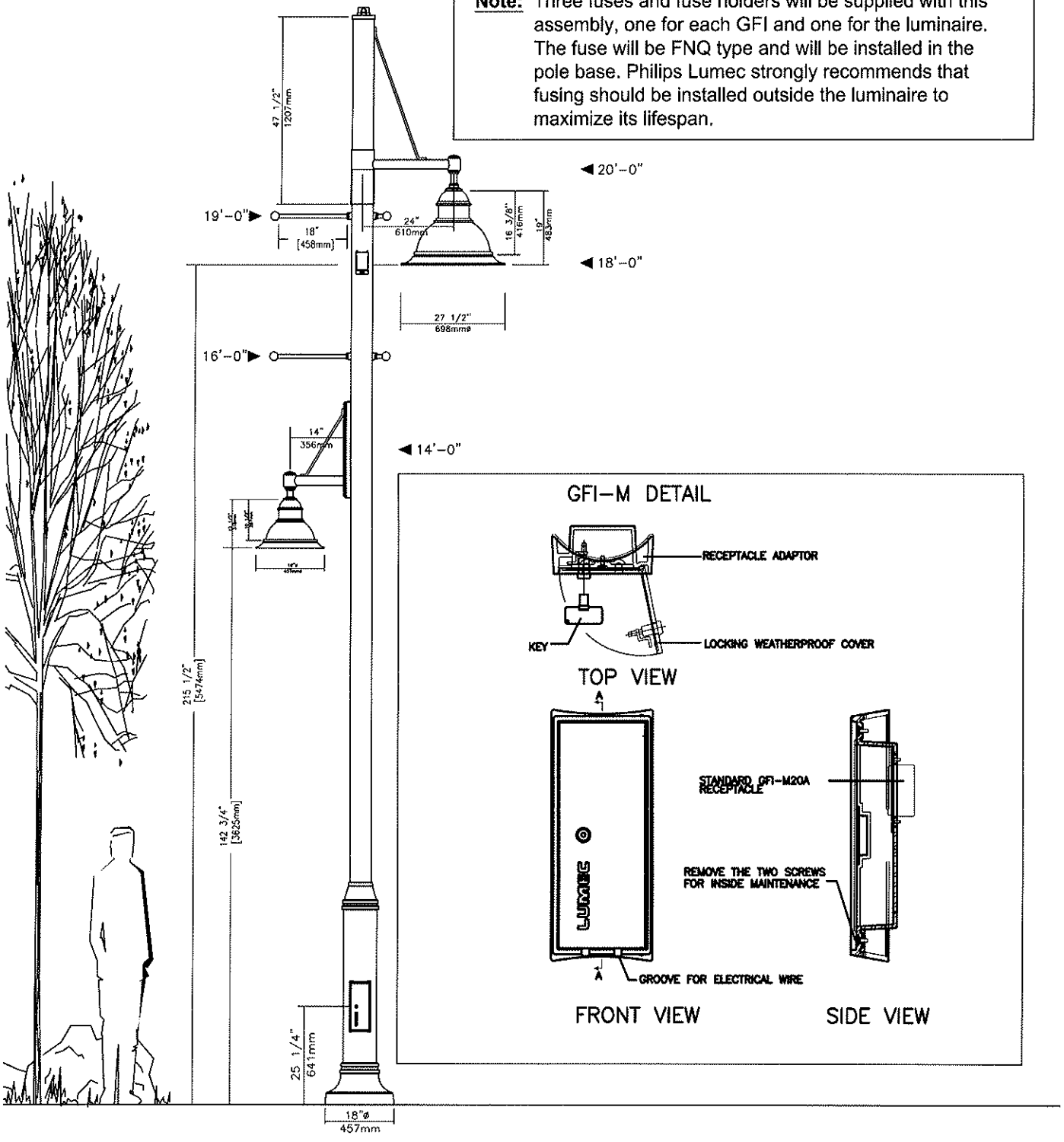

South Elgin Village of (47589)

Type: Double DMS50 -DOS DMS50-90W80LED4K-ES-LE3F-120-PC-1A-90deg-PH8/120-DOS-40W30LED4K-ES-LE3F-120-PC-F-270deg-[SAM8V-003]-20-BAS18(2)-[FS1-001]-GFI20AI-GFI-M-MPL-14-1X36-12 1/2-DEC-BKTX

DMS50-TA-LCP56518 REV.1-47589-170-MA 20120920_083835.DOC

LIGHTING (VILLAGE STANDARD)

PHILIPS
LUMEC

Roadway

StreetView

Project:

Location:

Cat.No:

Type:

Lamps: Qty:

Notes:

The Philips Lumec StreetView LED luminaire is designed for many applications that require medium intensity lighting. Powered by the Philips LEDgine platform and featuring innovative thermal management design, this LED luminaire has two major assets: exceptional performance and unbeatable value.

Ordering guide

example: SVM-90W48LED4K-G2-LE3-UNIV-DMG-RC-HS-GY3

Luminaire	LED Module	Optical System	Voltage	Driver and Dimming	Twist-Lock Receptacle	Surge Protection	Luminaire Accessories	Finish
SVM					RC			GY3
SVM StreetView Medium	**16W16LED4K-G2**[4] or **22W16LED4K-G2**[4] or **24W16LED4K-G2**[4] or **30W16LED4K-G2**[4] or **32W32LED4K-G2** or **48W32LED4K-G2** or **60W32LED4K-G2** or **48W48LED4K-G2** or **72W48LED4K-G2** or **90W48LED4K-G2** or **140W48LED4K-G2**[2,4]	**LE2** Type II **LE3** Type III **LE5** Type V	**UNIV** 120 - 277VAC: 16 LED 32 LED 48 LED 140W 48 LED **HVU** 347-480VAC: 32 LED 48 LED	*Standard:* **DMG**[1,5] Dimmable driver 0-10V *Optional:* *(not available for 140W48LED)* **AMPD**[2,4,5] Amplight Dimming **Dynadimmer** Economy Profile **CDMGE25**[2,4,5] **CDMGE50**[2,4,5] **CDMGE75**[2,4,5] Median Profile **CDMGM25**[2,4,5] **CDMGM50**[2,4,5] **CDMGM75**[2,4,5] Safety Profile **CDMGS25**[2,4,5] **CDMGS50**[2,4,5] **CDMGS75**[2,4,5] **DALI**[2,4,5] Digitally Addressable Lighting Interface **DMG-AST***[2,4] Adjustable Startup Time **DMG-CLO***[2,4,5] Constant Light Output **DMG-OTL***[2,4] Over The Life **Includes 0-10v dimming*	*Standard:* **RC**[1,3] Receptacle for twist-lock photocell or shorting cap	*Optional:* **SP2**[6] 20kV / 20kA Surge Protector	**HS** House side shield, 1 per 16 LED light engine **PH8**[3,4] Twist-lock Photoelectric Cell, UNIV (120-277VAC) **PH8/347**[3] *(not available for 140W48LED)* Twist-lock Photoelectric Cell, HVU (347VAC) **PH8/480**[3] *(not available for 140W48LED)* Twist-lock Photoelectric Cell, HVU (480VAC) **PH8XL**[3,4] Twist-lock Photoelectric Cell, extended life, UNIV (120-277VAC) **PH9**[3] Shorting cap **SPC**[3,7] Starsense Photo-cell Control	**GY3** Grey finish

1. Please note these integrated features come standard with StreetView luminaires.
2. Denotes programmable driver option. Not available with HVU (347-480volt). Not available with 1050 mA version (140W48LED).
3. Use of photoelectric cell or shorting cap is required to ensure proper illumination.
4. Not available with HVU (347-480volt).
5. Dimming choices: Select either DMG or AMPD or one of the CDMG options or DALI.
6. When SP2 option is selected you will get SP2 instead of standard SP1.
7. Please note that more hardware as well as software are required. Please contact the quotations department for help with putting together the entire control system.

SVM StreetView

LED Cobra Head: 16, 32, and 48 LED

LED wattage and lumen values

LED CRI = 70, CCT = 4000K nominal (3985K +/- 275K or 3710K to 4260K), System (LED + driver) rated life = 100,000 hrs[1]

LED Module	Typical delivered lumens	Typical system wattage (W)[2]	LED current (mA)	Typical System Current (A) @						Luminaire Efficacy Rating (Lm/W)	BUG rating
				120V	208V	240V	277V	347V	480V		
16W16LED4K-G2-LE2	2164	19	350	0.160	0.100	0.090	0.082	N/A		113	B1-U0-G1
16W16LED4K-G2-LE3	2192	19	350	0.160	0.100	0.090	0.082			115	B1-U0-G1
16W16LED4K-G2-LE5	2299	19	350	0.160	0.100	0.090	0.082			123	B2-U0-G0
22W16LED4K-G2-LE2	2822	26	470	0.210	0.125	0.115	0.105			109	B1-U0-G1
22W16LED4K-G2-LE3	2860	26	470	0.210	0.125	0.115	0.105			111	B1-U0-G1
22W16LED4K-G2-LE5	2999	26	470	0.210	0.125	0.115	0.105			116	B2-U0-G1
24W16LED4K-G2-LE2	2965	27	530	0.225	0.135	0.120	0.110			109	B1-U0-G1
24W16LED4K-G2-LE3	3004	27	530	0.225	0.135	0.120	0.110			110	B1-U0-G1
24W16LED4K-G2-LE5	3150	27	530	0.225	0.135	0.120	0.110			115	B2-U0-G1
30W16LED4K-G2-LE2	3792	36	700	0.290	0.175	0.150	0.135			105	B1-U0-G1
30W16LED4K-G2-LE3	3842	36	700	0.290	0.175	0.150	0.135			106	B1-U0-G1
30W16LED4K-G2-LE5	4029	36	700	0.290	0.175	0.150	0.135			112	B3-U0-G1
32W32LED4K-G2-LE2	4085	34	350	0.300	0.185	0.165	0.155	0.105	0.090	118	B1-U0-G1
32W32LED4K-G2-LE3	4139	35	350	0.300	0.185	0.165	0.155	0.105	0.090	120	B1-U0-G1
32W32LED4K-G2-LE5	4341	35	350	0.300	0.185	0.165	0.155	0.105	0.090	126	B3-U0-G1
48W32LED4K-G2-LE2	6132	53	530	0.450	0.270	0.240	0.215	0.160	0.130	116	B2-U0-G1
48W32LED4K-G2-LE3	6214	53	530	0.450	0.270	0.240	0.215	0.160	0.130	117	B2-U0-G1
48W32LED4K-G2-LE5	6515	53	530	0.450	0.270	0.240	0.215	0.160	0.130	123	B3-U0-G1
60W32LED4K-G2-LE2	7752	71	700	0.595	0.340	0.295	0.265	0.210	0.160	109	B2-U0-G2
60W32LED4K-G2-LE3	7855	71	700	0.595	0.340	0.295	0.265	0.210	0.160	110	B2-U0-G2
60W32LED4K-G2-LE5	8237	71	700	0.595	0.340	0.295	0.265	0.210	0.160	116	B3-U0-G1
48W48LED4K-G2-LE2	6341	54	350	0.440	0.260	0.250	0.230	0.160	0.130	117	B2-U0-G1
48W48LED4K-G2-LE3	6426	54	350	0.440	0.260	0.250	0.230	0.160	0.130	118	B2-U0-G2
48W48LED4K-G2-LE5	6734	54	350	0.440	0.260	0.250	0.230	0.160	0.130	124	B3-U0-G1
72W48LED4K-G2-LE2	8985	79	530	0.660	0.390	0.350	0.310	0.225	0.170	114	B2-U0-G2
72W48LED4K-G2-LE3	9105	79	530	0.660	0.390	0.350	0.310	0.225	0.170	116	B2-U0-G2
72W48LED4K-G2-LE5	9542	79	530	0.660	0.390	0.350	0.310	0.225	0.170	121	B3-U0-G2
90W48LED4K-G2-LE2	11475	105	700	0.890	0.515	0.455	0.390	0.305	0.225	109	B2-U0-G2
90W48LED4K-G2-LE3	11628	105	700	0.890	0.515	0.455	0.390	0.305	0.225	111	B2-U0-G2
90W48LED4K-G2-LE5	12186	105	700	0.890	0.515	0.455	0.390	0.305	0.225	116	B4-U0-G2
140W48LED4K-G2-LE2	15790	160	1050	1.330	0.760	0.665	0.575	N/A		99	B3-U0-G3
140W48LED4K-G2-LE3	16010	161	1050	1.330	0.760	0.665	0.575			99	B3-U0-G3
140W48LED4K-G2-LE5	17248	162	1050	1.330	0.760	0.665	0.575			106	B4-U0-G2

LIGHTING (VILLAGE STANDARD)

SVM StreetView

LED Cobra Head: 16, 32, and 48 LED

Dimensions

Side View

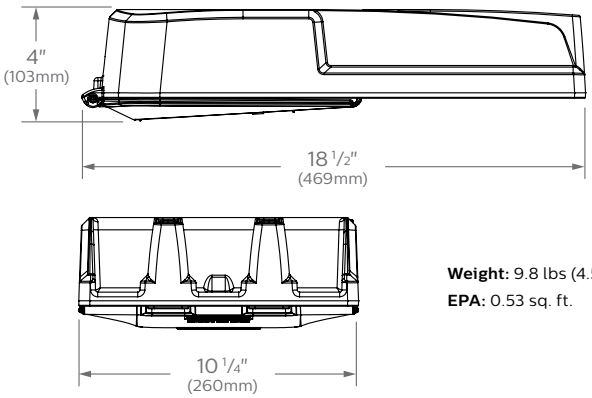

Weight: 9.8 lbs (4.5 kg)

EPA: 0.53 sq. ft.

Bottom View

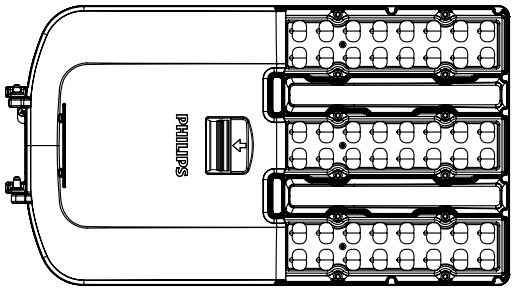

Predicted Lumen Depreciation Data

Predicted performance derived from LED manufacturer's data and engineering design estimates, based on IESNA LM-80 methodology. Actual experience may vary due to field application conditions.L_{70} is the predicted time when LED performance depreciates to 70% of initial lumen output. Calculated per IESNA TM21-11. Published L_{70} hours limited to 6 times actual LED test hours

Ambient Temperature °C	Driver mA	Calculated L_{70} Hours	L_{70} per TM-21	Lumen Maintenance % at 60,000 hrs
25°C	**up to 1050 mA**	**>100,000 hours**	**>60,000 hours**	**>96%**

Specifications

Housing

Made of low copper die cast A360 Aluminum alloy, for a high resistance to corrosion, 0.100" (2.5mm) minimum thickness. Fits on a 1.66" (42mm) O.D. (1.25" NPS), 1.9" (48mm) O.D. (1.5" NPS) or 2 3/8" (60mm) O.D. (2" NPS) by 5 1/4" (133mm) minimum long tenon. Comes with a zinc plated clamp fixed by 2 zinc plated hexagonal bolts 3/8 16 UNC for ease of installation. Provides an easy step adjustment of +/- 5° tilt in 2.5º increments. A quick release, tool less entry, hinged, removable polymeric door with integral latch opens downward to provide access to electronic components and to a terminal block. Door is secured to prevent accidental dropping or disengagement. A clearance of 8" (203mm) at the rear is required in order to remove the door. Complete with a bird guard protecting against birds and similar intruders and an ANSI label to identify wattage and source (both included in box).

Light Engine

Composed of 4 main components: LED Module / Optical System / Heat Sink / Driver.

Electrical components are RoHS compliant, IP66 sealed light engine. LEDs tested by ISO 17025-2005 accredited lab in accordance with IESNA LM-80 guidelines in compliance with EPA ENERGY STAR, extrapolations in accordance with IESNA TM-21. Metal core board ensures greater heat transfer and longer lifespan.

LED Module: (Included), High performance white LEDs. Color temperature as per ANSI/NEMA, bin neutral white 4000 Kelvin nominal (3985 +/- 275K or 3710K to 4260K), CRI 70 Min.

Optical System: Composed of high performance UV stabilized optical grade polymer refractor lenses to achieve desired distribution optimized to get maximum spacing, target lumens and a superior lighting uniformity. System is rated IP66. Performance shall be tested per LM-63, LM-79 and TM-15 (IESNA) certifying its photometric performance. Dark Sky compliant with 0% uplight and U0 per IESNA TM-15.

Heat Sink: Built in the housing, designed to ensure high efficacy and superior cooling by natural vertical convection air flow pattern always close to LEDs and driver optimising their efficiency and life. Product does not use any cooling device with moving parts (only passive cooling). Wide openings enable natural cleaning and removal of dirt and debris. Entire luminaire is rated for operation in ambient temperature of -40°C / -40°F up to +40°C / +104°F.

Driver: High power factor of 95%. Electronic driver, operating range 50/60 Hz. Auto adjusting universal voltage input from 120 to 277 or 347 to 480 VAC (140W48LED4K available in 120-277V only) rated for both application line to line or line to neutral, Class I, THD of 20% max.

DMG: Dimming compatible 0-10 volts.
The current supplying the LEDs will be reduced by the driver if the driver experiences internal overheating as a protection to the LEDs and the electrical components. Output is protected from short circuits, voltage overload and current overload. Automatic recovery after correction. Standard built in driver surge protection of 2.5kV (min).

Integrated Features

DMG: Dimmable driver 0-10V.

RC: Receptacle for a twist-lock photocell or shorting cap. Use of photocell or shorting cap is required to ensure proper illumination.

SP1: Surge protection device tested in accordance with ANSI/IEEE C62.45 per ANSI/IEEE C62.41.2 Scenario I Category C High Exposure 10kV/10kA waveforms for Line-Ground, Line-Neutral and Neutral-Ground, and in accordance with DOE MSSLC Model Specification for LED Roadway Luminaires Appendix D Electrical Immunity High test level 10kV/10kA.

Please note that these integrated features always come with StreetView luminaire.

SVM StreetView

LED Cobra Head: 16, 32, and 48 LED

Specifications (continued)

Driver and Luminaire Options

AMPD*: Driver pre-programmed for compatibility with Amplight control system.

AST*: Pre-set driver for progressive start-up of the LED module(s) to optimize energy management and enhance visual comfort at start-up.

CLO*: Pre-set driver to manage the lumen depreciation by adjusting the power given to the LEDs offering the same lighting intensity during the entire lifespan of the LED module.

DALI*: Pre-set driver compatible with the DALI control system.

OTL*: Pre-set driver to signal end of life of the LED module(s) for better fixture management.

CDMG*: Dynadimmer standard dimming functionalities including pre-programmed scenarios to suit many applications and needs from safety to maximum energy savings.

Safety Mode:
CDMGS25: 4 hours, 25% power dimming
CDMGS50: 4 hours 50% power dimming
CDMGS75: 4 hours 75% power dimming

Median Mode:
CDMGM25: 6 hours 25% power dimming
CDMGM50: 6 hours 50% power dimming
CDMGM75: 6 hours 75% power dimming

Economy Mode:
CDMGE25: 8 hours 25% power dimming
CDMGE50: 8 hours 50% power dimming
CDMGE75: 8 hours 75% power dimming

** Not available with HVU (347-480V)*

SP2: 20kV / 20kA surge protection device that provides extra protection beyond the SP1 10kV/10kA level.

HS: House side shield, 1 per 16 LED light engine.

PH8*: Twist-lock Photoelectric Cell, UNIV (120-277VAC).

PH8/347*: Twist-lock Photoelectric Cell, HVU (347VAC).

PH8/480*: Twist-lock Photoelectric Cell, HVU (480VAC).

PH8XL*: Twist-lock Photoelectric Cell, extended life, UNIV (120-277VAC).

PH9*: Shorting cap.

** Use of photoelectric cell or shorting cap is required to ensure proper illumination.*

SPC: Starsense twist-lock photoelectric cell and antenna node, on / off.

Luminaire Useful Life

Refer to IES files for energy consumption and delivered lumens for each option. Based on ISTMT in situ thermal testing in accordance with UL1598 and UL8750, Philips System Reliability Tool, Philips Advance data and Philips Lumileds LM-80/TM-21 data, expected to reach 100,000 + hours with >L70 lumen maintenance @ 25°C. Luminaire Useful Life accounts for LED lumen maintenance AND all of these additional factors including: LED life, driver life, PCB substrate, solder joints, on/off cycles, burning hours and corrosion.

Wiring

The connection of the luminaire is done using a terminal block connector 600V, 85A for use with #2 to #14 AWG. wires from the primary circuit, located inside the housing. Due to the inrush current that occurs with electronic drivers, recommend using a 10Amp time-delay fuse to avoid unwanted fuse blowing (false tripping) that can occur with normal or fast acting fuses.

Hardware

All exposed screws shall be complete with Ceramic primer seal to reduce seizing of the parts, also offers a high resistance to corrosion. All seals and sealing devices are made and/or lined with EPDM and/or silicone and/or rubber.

Finish

Color in accordance with the AAMA 2603 standard. Application of polyester powder coat paint (4 mils/100 microns) with ± 1 mils/24 microns of tolerance. The Thermosetting resins provides a discoloration resistant finish in accordance with the ASTM D2244 standard, as well as luster retention in keeping with the ASTM D523 standard and humidity proof in accordance with the ASTM D2247 standard.

The surface treatment achieves a minimum of 2000 hours for salt spray resistant finish in accordance with testing performed and per ASTM B117 standard.

LED products manufacturing standard

The electronic components sensitive to electrostatic discharge (ESD) such as light emitting diodes (LEDs) are assembled in compliance with IEC61340-5-1 and ANSI/ESD S20.20 standards so as to eliminate ESD events that could decrease the useful life of the product.

Vibration Resistance

The SVM meets the ANSI C136.31, American National Standard for Roadway Luminaire Vibration specifications for Bridge/overpass applications. (Tested for 3G over 100,000 cycles by independent lab)

Certifications and Compliance

cULus Listed for Canada and USA. Luminaire meets DOE and MSSLC Model Specification for LED Roadway Luminaires. StreetView LED Cobrahead luminaires are DesignLights Consortium qualified. Luminaire complies with or exceeds the following ANSI C136 standards: .2, .3, .10, .14, .15, .22, .25, .31, .37, .41.

Limited Warranty

10-year limited warranty.
See philips.com/warranties for details and restrictions.

Brackets/Arms

For brackets / arms available with this luminaire, see Lumec 3D for details.

© 2016 Philips Lighting Holding B.V. All rights reserved. Philips reserves the right to make changes in specifications and/or to discontinue any product at any time without notice or obligation and will not be liable for any consequences resulting from the use of this publication.
philips.com/luminaires

Philips Lighting North America Corporation
200 Franklin Square Drive, Somerset, NJ 08873
Tel. 855-486-2216

Philips Lighting Canada Ltd.
281 Hillmount Rd, Markham, ON, Canada L6C 2S3
Tel. 800-668-9008

LIGHTING (VILLAGE STANDARD)

StreetView

SVM

Project: | Catalog No: | Mfg:

Location: | Fixture Type: | Qty:

Notes:

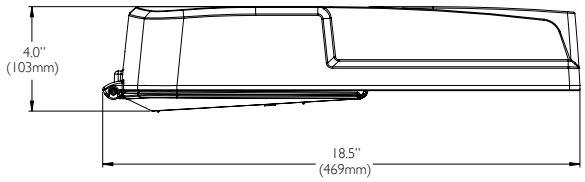

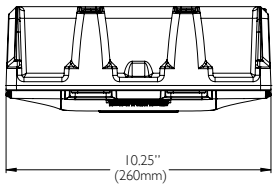

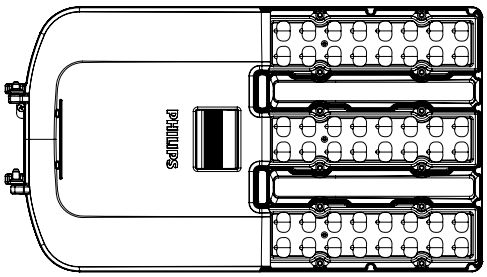

SVM

EPA:
0.51 sq ft

Weight:
10.4 lbs (4.7 kg)

Ordering Guide

example: SVM-90W48LED4K-R-LE3-UNIV-DMG-RC-WC10-HS-GY3

Luminaire	LED Module	Optical System	Voltage	Integrated Features	Driver and Luminaire Options	Luminaire Accessories	Finish
SVM	90W48LED4K-R	LE3	UNIV	DMG-RC-WC10	SP1	HS	GY3
SVM LED Roadway Luminaire	16W16LED4K-R 22W16LED4K-R 24W16LED4K-R 30W16LED4K-R 32W32LED4K-R 48W32LED4K-R 60W32LED4K-R 48W48LED4K-R 72W48LED4K-R 90W48LED4K-R	**LE2** TYPE II **LE3** TYPE III **LE5** TYPE V	**UNIV:** 120 / 277: 16LED 32 LED 48 LED **HVU:** 347 / 480: 32 LED 48 LED	**DMG**[1] Dimmable driver 0-10V **RC**[1,2] Receptacle for a twist-lock photocell or shorting cap **WC10**[1] 10-year limited warranty	**SP1** **CLO*** **AST*** **OTL*** **AMPD*** **CDMG*** **DALI*** ** Not available with 347/480V*	**HS**[3] House side shield **PH8**[2,3] Photoelectric cell **PH8XL**[2,3,4] Photoelectric cell, extended life **PH9**[2,3] Shorting Cap **SPC**[3] Starsense Photo-cell Control	**GY3** Grey finish **NF** Non-painted (optional)

Ordering Guide - StreetView High Output

example: SVM-140W48LED4K-T-LE3-UNIV-DMG-RC-WC10-HS-GY3

Luminaire	LED Module	Optical System	Voltage	Integrated Features	Driver and Luminaire Options	Luminaire Accessories	Finish
SVM	140W48LED4K-T	LE3	UNIV	DMG-RC-WC10	SP1	HS	GY3
SVM LED Roadway Luminaire	140W48LED4K-T	**LE2** TYPE II **LE3** TYPE III **LE5** TYPE V	**UNIV:** 120 / 277	**DMG**[1] Dimmable driver 0-10V **RC**[1,2] Receptacle for a twist-lock photocell or shorting cap **WC10**[1] 10-year limited warranty	**SP1**	**HS**[3] House side shield **PH8**[2,3] Photoelectric cell **PH8XL**[2,3,4] Photoelectric cell, extended life **PH9**[2,3] Shorting Cap **SPC**[3] Starsense Photo-cell Control	**GY3** Grey finish

1. Please note that these integrated features always come with MiniView luminaires.
2. Use of photoelectric cell or shorting cap is required to ensure proper illumination.
3. Please note that these accessories need to be ordered as an accessory, and they are quickly and easily installed in the field.
4. Not available with HVU: 347 / 480 volt.

© 2014 Koninklijke Philips N.V. All rights reserved.
Specifications are subject to change without notice.
www.philips.com/luminaires

PHILIPS LUMEC

LED Wattage and Lumen Values - StreetView Luminaire

LED = Philips Lumileds LUXEON R, CRI = 75, CCT = 4000K (+/- 350K)

System (LED + driver) rated life = 100,000 hrs [1]

LED Module	Typical Delivered Lumens	Typical System Wattage (W)[2]	Typical System Current (A) @						LED Current (mA)	HID Equivalent[3]	Luminaire Efficacy Rating (Lm/W)	BUG Rating
			120V	208V	240V	277V	347V	480V				
16W16LED4K-R-LE2	1761	18	0.157	0.091	0.089	0.085	N/A	N/A	350	50-70W	100	B1 U0 G1
16W16LED4K-R-LE3	1870	18	0.157	0.091	0.089	0.085	N/A	N/A	350	50-70W	107	B1 U0 G1
16W16LED4K-R-LE5	1784	18	0.157	0.091	0.089	0.085	N/A	N/A	350	50-70W	102	B2 U0 G0
22W16LED4K-R-LE2	2359	24	0.215	0.124	0.156	0.142	N/A	N/A	490	50-70W	95	B1 U0 G1
22W16LED4K-R-LE3	2504	24	0.215	0.124	0.156	0.142	N/A	N/A	490	50-70W	101	B1 U0 G1
22W16LED4K-R-LE5	2390	24	0.215	0.124	0.156	0.142	N/A	N/A	490	50-70W	96	B2 U0 G1
24W16LED4K-R-LE2	2511	25	0.307	0.177	0.158	0.141	N/A	N/A	530	70-100W	94	B1 U0 G1
24W16LED4K-R-LE3	2666	25	0.307	0.177	0.158	0.141	N/A	N/A	530	70-100W	100	B1 U0 G1
24W16LED4K-R-LE5	2544	25	0.307	0.177	0.158	0.141	N/A	N/A	530	70-100W	95	B2 U0 G1
30W16LED4K-R-LE2	3075	35	0.29	0.167	0.17	0.12	N/A	N/A	700	70-100W	87	B1 U0 G1
30W16LED4K-R-LE3	3295	35	0.29	0.167	0.17	0.12	N/A	N/A	700	70-100W	92	B1 U0 G1
30W16LED4K-R-LE5	3145	35	0.29	0.167	0.17	0.12	N/A	N/A	700	70-100W	88	B2 U0 G1
32W32LED4K-R-LE2	3618	36	0.29	0.167	0.162	0.154	0.119	0.1	350	70-100W	103	B1 U0 G1
32W32LED4K-R-LE3	3754	36	0.29	0.167	0.162	0.154	0.119	0.1	350	70-100W	107	B1 U0 G1
32W32LED4K-R-LE5	3404	36	0.29	0.167	0.162	0.154	0.119	0.1	350	70-100W	97	B2 U0 G1
48W32LED4K-R-LE2	5309	49	0.401	0.231	0.211	0.193	0.172	0.14	530	70-100W	100	B1 U0 G1
48W32LED4K-R-LE3	5509	49	0.401	0.231	0.211	0.193	0.172	0.14	530	70-100W	104	B1 U0 G1
48W32LED4K-R-LE5	4995	49	0.401	0.231	0.211	0.193	0.172	0.14	530	70-100W	94	B3 U0 G1
60W32LED4K-R-LE2	6619	70	0.57	0.329	0.33	0.25	0.2	0.14	700	100-150W	94	B2 U0 G1
60W32LED4K-R-LE3	6924	70	0.57	0.329	0.33	0.25	0.2	0.14	700	100-150W	97	B2 U0 G2
60W32LED4K-R-LE5	6280	70	0.57	0.329	0.33	0.25	0.2	0.14	700	100-150W	89	B3 U0 G1
48W48LED4K-R-LE2	5090	49	0.383	0.221	0.225	0.214	0.167	0.132	350	70-100W	105	B1 U0 G1
48W48LED4K-R-LE3	5224	49	0.383	0.221	0.225	0.214	0.167	0.132	350	70-100W	107	B1 U0 G1
48W48LED4K-R-LE5	5097	49	0.383	0.221	0.225	0.214	0.167	0.132	350	70-100W	105	B3 U0 G1
72W48LED4K-R-LE2	7705	78	0.63	0.363	0.336	0.309	0.239	0.178	530	100-150W	99	B2 U0 G2
72W48LED4K-R-LE3	7909	78	0.63	0.363	0.336	0.309	0.239	0.178	530	100-150W	101	B2 U0 G2
72W48LED4K-R-LE5	7717	78	0.63	0.363	0.336	0.309	0.239	0.178	530	100-150W	99	B3 U0 G2
90W48LED4K-R-LE2	9854	105	0.86	0.496	0.5	0.43	0.3	0.22	700	150-175W	95	B2 U0 G2
90W48LED4K-R-LE3	10113	105	0.86	0.496	0.5	0.43	0.3	0.22	700	150-175W	98	B2 U0 G2
90W48LED4K-R-LE5	9868	105	0.86	0.496	0.5	0.43	0.3	0.22	700	150-175W	95	B4 U0 G4
90W48LED4K-R-LE2-HS[4]	7793	105	0.86	-	0.5	0.43	0.3	0.22	700	150W	75	B1 U0 G2
90W48LED4K-R-LE3-HS[4]	7866	105	0.86	-	0.5	0.43	0.3	0.22	700	150W	76	B1 U0 G2

1 L_{70} > 100,000 hrs (at ambient temperature = 25°C and forward current = 700 mA).
2 System wattage or total luminaire wattage includes the LED module and the LED driver.
3 Equivalence should always be confirmed by a photometric layout.
4 HS is shown as an example. HS is also available with all other LED modules except for type V distribution.

Note : Due to rapid and continuous advances in LED technology. LED luminaire data is subject to change without notice and at the discretion of Philips.

© 2014 Koninklijke Philips N.V. All rights reserved.
Specifications are subject to change without notice.
www.philips.com/luminaires

LED Wattage and Lumen Values - StreetView High Output Luminaire

LED = Philips Lumileds LUXEON T, CRI = 75, CCT = 4000K (+/- 350K)

System (LED + driver) rated life = 100,000 hrs [1]

LED Module	Typical Delivered Lumens	Typical System Wattage (W)[2]	Typical System Current (A) @						LED Current (mA)	HID Equivalent[3]	Luminaire Efficacy Rating (Lm/W)	BUG Rating
			120V	208V	240V	277V	347V	480V				
140W48LED4K-T-LE2	14556	160	1.330	0.760	0.665	0.575	N/A	N/A	1050	200-250W	94	B3 U0 G2
140W48LED4K-T-LE3	15200	160	1.330	0.760	0.665	0.575	N/A	N/A	1050	200-250W	98	B3 U0 G2
140W48LED4K-T-LE5	14880	160	1.330	0.760	0.665	0.575	N/A	N/A	1050	200-250W	96	B4 U0 G2

1 L_{70} > 100,000 hrs (at ambient temperature = 25°C and forward current = 1050 mA).
2 System wattage or total luminaire wattage includes the LED module and the LED driver.
3 Equivalence should always be confirmed by a photometric layout.
4 HS is shown as an example. HS is also available with all other LED modules except for type V distribution.

Note : Due to rapid and continuous advances in LED technology. LED luminaire data is subject to change without notice and at the discretion of Philips.

Specifications

Housing:

Made of low copper die cast A360 Aluminum alloy 0.100" (2.5mm) minimum thickness. Fits on a 1.66" (42mm) O.D. (1.25" NPS), 1.9" (48mm) O.D. (1.5" NPS) or 2 3/8" (60mm) O.D. (2" NPS) by 4 1/4" (108mm) minimum long tenon. Comes with a zinc plated clamp fixed by 2 zinc plated hexagonal bolts 3/8 16 UNC for ease of installation. Provides an easy step adjustment of +/- 5° tilt in 2.5° increments.
A quick release, tool less entry, hinged, removable door opens downward to provide access to electronic components and to a terminal block. Door is secured to prevent accidental dropping or disengagement.
A clearance of 8" (203mm) at the rear is required in order to remove the door. Complete with a bird guard protecting against birds and similar intruders and an ANSI label to identify wattage and source (both included in box).

Light Engine:

Composed of 4 main components: LED module / Optical System / Heat Sink / Driver

Electrical components are RoHS compliant, IP66 sealed LED module equipped with Philips Lumileds LUXEON LEDs.

LEDs tested by ISO 17025-2005 accredited lab in accordance with IESNA LM-80 guidelines in compliance with EPA ENERGY STAR, extrapolations in accordance with IESNA TM-21. Metal core board ensures greater heat transfer and longer lifespan.

LED Module:

(Included), Philips Lumileds LUXEON R LEDs = all 16LED, all 32LED, 48LED versions except 140W48LED4K = LUXEON T LEDs. Color temperature as per ANSI bin 4000 Kelvin nominal (3985K +/- 275K), CRI 70 Min. 75 Typical.

Optical System:

Composed of high-performance optical grade polymer refractors lenses to achieve desired distribution optimized to get maximum spacing, target lumens and a superior lighting uniformity. System is rated IP66. Performance shall be tested per LM-63, LM-79 and TM-15 (IESNA) certifying its photometric performance. Dark Sky compliant with 0% uplight and U0 per IESNA TM-15.

LE2 TYPE II Asymmetrical Distribution
LE3 TYPE III Asymmetrical Distribution
LE5 TYPE V Symmetrical (square)

Heat Sink:

Built in the housing, the innovative high efficacy heat sink chimney design ensures superior cooling by natural convection air flow pattern always close to LEDs and driver optimising their efficiency and life. Product does not use any cooling device with moving parts (only passive cooling). Wide channels enable natural cleaning and removal of dirt and debris.

Entire luminaire is rated for operation in ambient temperature of -40°C / -40°F up to +40°C / +104°F.

Driver

High power factor of 95%. Electronic driver, operating range 50/60 Hz. Auto adjusting universal voltage input from 120 to 277 and 347 to 480 VAC (148W40LED4K available in 120-277V only) rated for both application line to line or line to neutral, Class I, THD of 20% max.

The current supplying the LEDs will be reduced by the driver if the driver experiences internal overheating as a protection to the LEDs and the electrical components. Output is protected from short circuits, voltage overload and current overload. Automatic recovery after correction. Standard built in driver surge protection of 2.5kV (min).

Integrated Features

RC
Receptacle for a twist-lock photocell or shorting cap. Use of photocell or shorting cap is required to ensure proper illumination.

DMG
Dimmable driver 0-10V

WC10
StreetView is covered by a 10-year warranty from defects in material and workmanship in its intended use, as well as coverage for the finish. Visit website for more details on warranty.

Please note that these integrated features always come with StreetView luminaire.

Driver and Luminaire Options

SP1
Surge protection device tested in accordance with ANSI/IEEE C62.45 per ANSI/IEEE C62.41.2 Scenario I Category C High Exposure 10kV/10kA waveforms for Line-Ground, Line-Neutral and Neutral-Ground, and in accordance with DOE MSSLC Model Specification for LED Roadway Luminaires Appendix D Electrical Immunity High test level 10kV/10kA.

CLO*
Pre-set driver to manage the lumen depreciation by adjusting the power given to the LEDs offering the same lighting intensity during the entire lifespan of the LED module.

AST*
Pre-set driver for progressive start-up of the LED module(s) to optimize energy management and enhance visual comfort at start-up.

OTL*
Pre-set driver to signal end of life of the LED module(s) for better fixture management.

© 2014 Koninklijke Philips N.V. All rights reserved.
Specifications are subject to change without notice.
www.philips.com/luminaires

AMPD*
Driver pre-programmed for compatibility with Amplight control system.

CDMG*
Dynadimmer standard dimming functionalities including pre-programmed scenarios to suit many applications and needs from safety to maximum energy savings.

DALI*
Pre-set driver compatible with the DALI control system.

** Not available with 347/480V or 140W48LED versions.*

Luminaire Accessories

HS
House side shield
PH8[1]
Photoelectric cell
PH8XL[1,2]
Photoelectric cell, twist-lock type, "Fail ON", extended life / 10-year limited warranty from supplier
PH9[1]
Shorting Cap
SPC[1]
Starsense Photo-cell Control

1 Luminaire option RC is required with this accessory.

2 Not available with HVU: 347 / 480 volt.

Please note that these accessories need to be ordered as an accessory, and they are quickly and easily installed in the field.

Luminaire Useful Life:

Refer to IES files for energy consumption and delivered lumens for each option. Based on ISTMT in situ thermal testing in accordance with UL1598 and UL8750, Philips Advance data and Philips Lumileds LM-80/TM-21 data, expected to reach 100,000+ hours with >L70 lumen maintenance @ 25°C.

Wiring:

The connection of the luminaire is done using a terminal block connector 600V, 85A for use with #2 14 AWG. wires from the primary circuit, located inside the housing.

Hardware:

All exposed screws shall be stainless steel with Ceramic primer seal basecoat to reduce seizing of the parts. All seals and sealing devices are made and/or lined with EPDM and/or silicone and/or rubber.

Finish:

Color to be medium grey (GY3) and in accordance with the AAMA 2603 standard. Application of a polyester powdercoat paint (4 mils/100 microns) with ± 1 mils/24 microns of tolerance. The Thermosetting resins provides a discoloration resistant finish in accordance with the ASTM-D2244 standard, as well as luster retention in keeping with the ASTM-D523 standard and humidity proof in accordance with the ASTM-D2247 standard.

The surface treatment achieves a minimum of 2000 hours for salt spray resistant finish in accordance with testing performed and per ASTM-B117 standard.

LED Products Manufacturing Standard:

The electronic components sensitive to electrostatic discharge (ESD) such as light emitting diodes (LEDs) are assembled in compliance with IEC61340-5-1 and ANSI/ESD S20.20 standards so as to eliminate ESD events that could decrease the useful life of the product.

Vibration Resistance:

The SVM meets the ANSI C136.31, American National Standard for Roadway Luminaire Vibration specifications for Bridge /overpass applications. (Tested for 3G over 100,000 cycles by an independent lab).

Certifications and Compliance:

CSA, cULus listed for Canada and USA. Luminaire complies with DOE MSSLC Model Specification for LED Roadway Luminaires. StreetView is listed on the DesignLights Consortium (DLC) Qualified Products

DESIGNLIGHTS CONSORTIUM

© 2014 Koninklijke Philips N.V. All rights reserved.
Specifications are subject to change without notice.
www.philips.com/luminaires

Philips Lighting
North America Corporation
200 Franklin Square Drive
Somerset, NJ 08873
Phone: 855-486-2216

Philips Lighting Company
281 Hillmount Road
Markham ON, Canada L6C 2S3
Phone: 800-668-9008

LIGHTING (VILLAGE STANDARD)

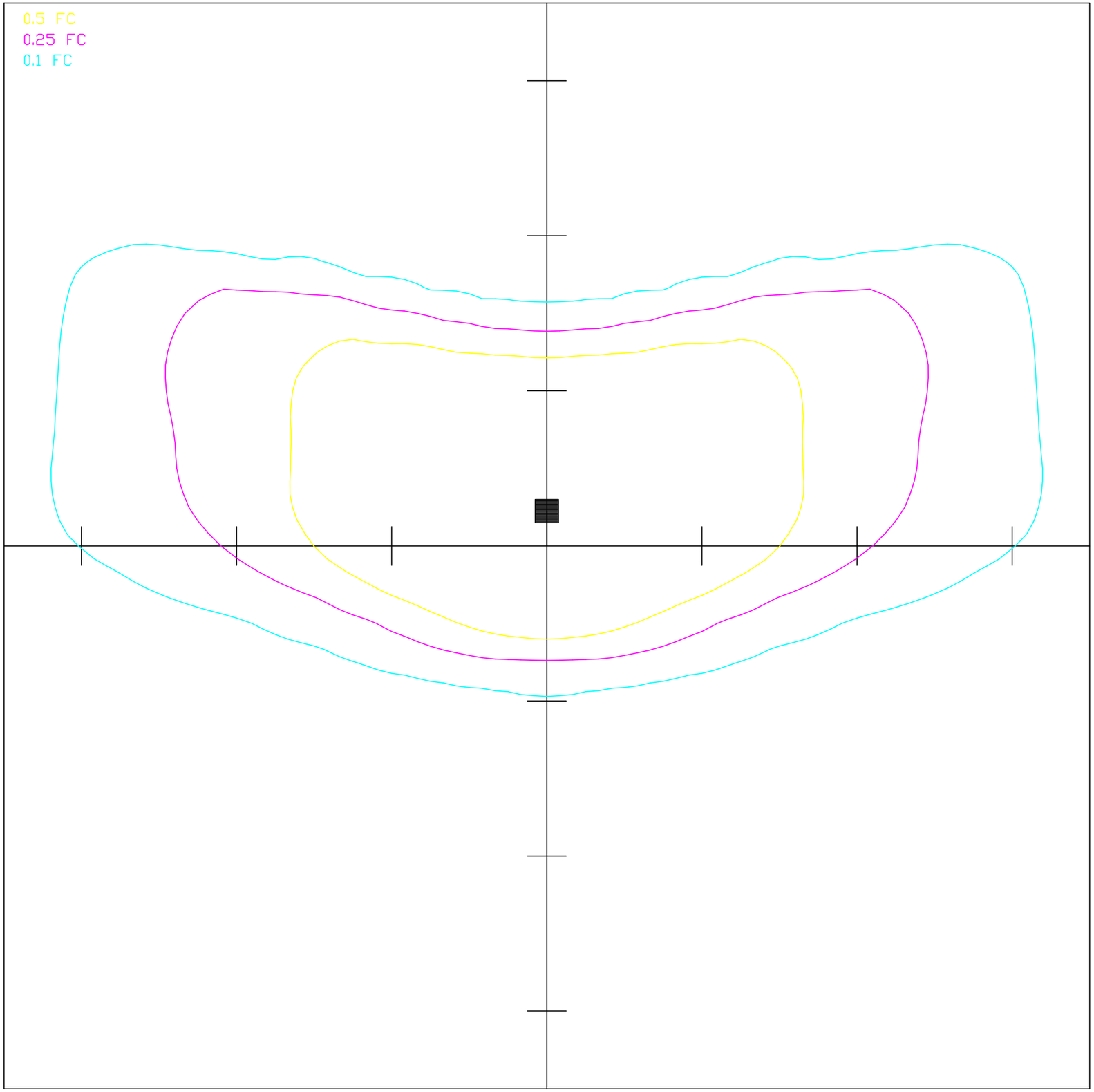

IESNA:LM-63-2002
[ISSUEDATE] 11 January 2013
[TESTLAB] Spectra Lux Industries Inc.
[TEST] S1301111-R1
[MANUFAC] Philips Roadway Lighting
[LUMCAT] SVM-90W48LED4K-R-LE3
[LUMINAIRE] StreetView
[LAMP] (3 Cluster of 16 LXA7-PW40 LED's) White 100W SSL
[_LAMPDETAILS] DC Voltage=142.85V, Current=0.7A, CCT=N/K, CRI=N/
[_BURNING] Vertical Base Up (10,034 Luminaire Lumens)
[_REFLECTOR] None
[_LENS] 3x16 Clear Acrylic Collimators
[_HOUSING] Die Cast Aluminum
[_SKTPOSITION] Fixed
[_REPORTMODULE] IES LM-31-95 Roadway Report
[_SUBREPORTMODULE] IES LM-31-95 Roadway Asymmetric Luminaire
[DISTRIBUTION] Type III, Medium

30 FEET BETWEEN AXIS TICK-MARKS
LUMENS PER LAMP = -1
LIGHT LOSS FACTOR = 0.85
OPTICAL HEIGHT = 25 FEET
ARM LENGTH = 1.5 FEET
TILT = 0 DEGREES FROM NADIR
MAXIMUM ILLUMINANCE = 3.4 FOOTCANDLES

Footprints (TM) by Philips-Gardco Lighting

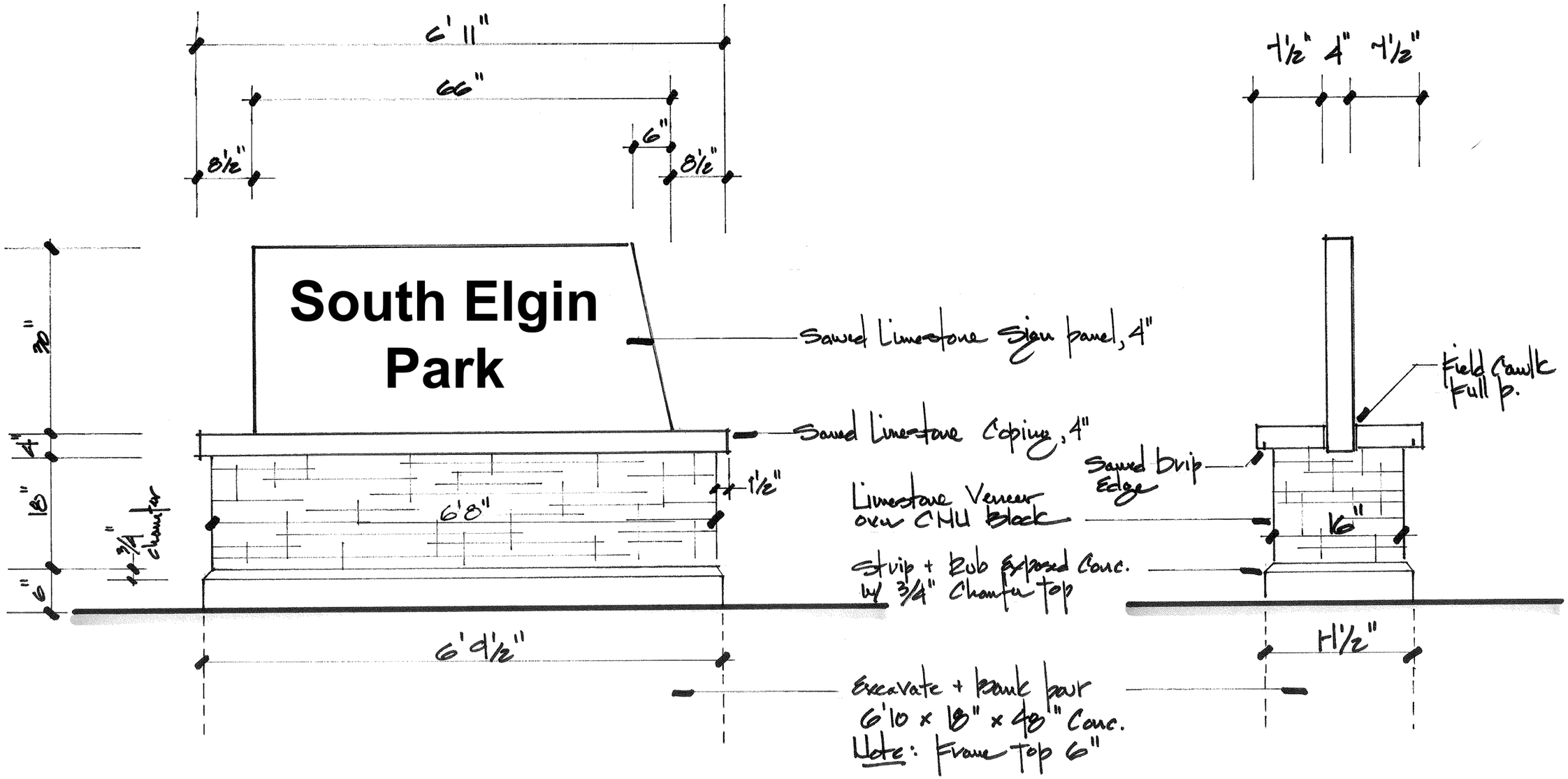

Park Site Sign

Limestone - Glacier Bay Ashlar

scale: 3/4" = 1'0"

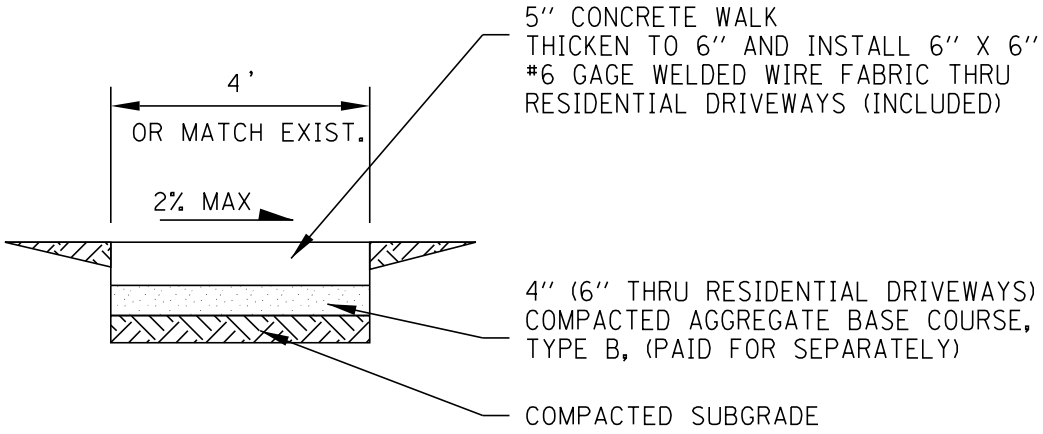

NOTE: PROVIDE FIBER EXPANSION JOINTS WHERE NEW SIDEWALK MEETS EXISTING AND @ 50' O.C. MAX. AND PROVIDE CONTROL JOINTS @ 5' O.C.

P.C.C. SIDEWALK - 5"

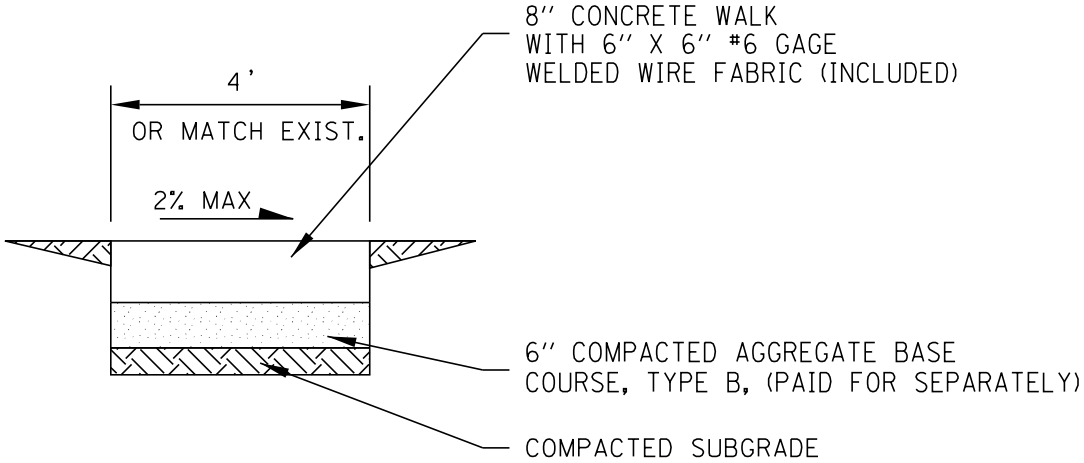

NOTE: PROVIDE FIBER EXPANSION JOINTS WHERE NEW SIDEWALK MEETS EXISTING AND @ 50' O.C. MAX. AND PROVIDE CONTROL JOINTS @ 5' O.C.

P.C.C. SIDEWALK - 8"

VILLAGE OF SOUTH ELGIN

REV 09-09-14
NOT TO SCALE

P.C.C. SIDEWALK

9/9/2014 \\corp.baxwood.com\Projects\CrystalLake\SELGV\40480-VillStd Details\CADD\Details_01_01_14_ for village.dgn

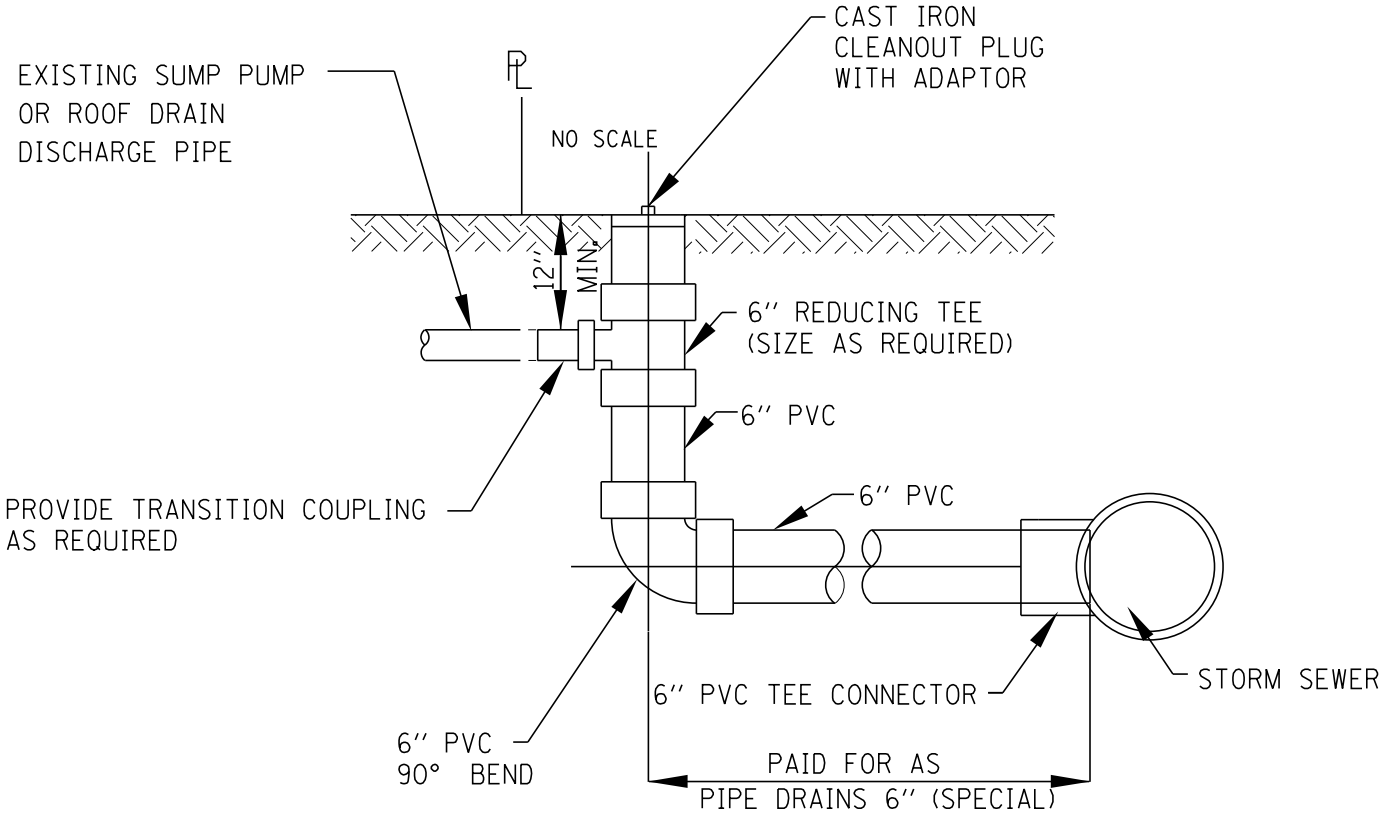

NOTE:

THE PIPE DRAINS 6" (SPECIAL) MAY ALSO CONNECT TO A STORM MANHOLE, INLET, OR STORM SEWER AS SHOWN ON THE PLANS. THE SPECIFIC STORM DRAINAGE STRUCTURE IS NOT SHOWN IN THE DETAIL.

VILLAGE OF SOUTH ELGIN

REV 01/01/14
NOT TO SCALE

PIPE DRAINS 6" (SPECIAL)

4/30/2014 I:\Crystal Lake\SELGV\140480-VIIStd Details\CADD\Details_01_01_14.dgn

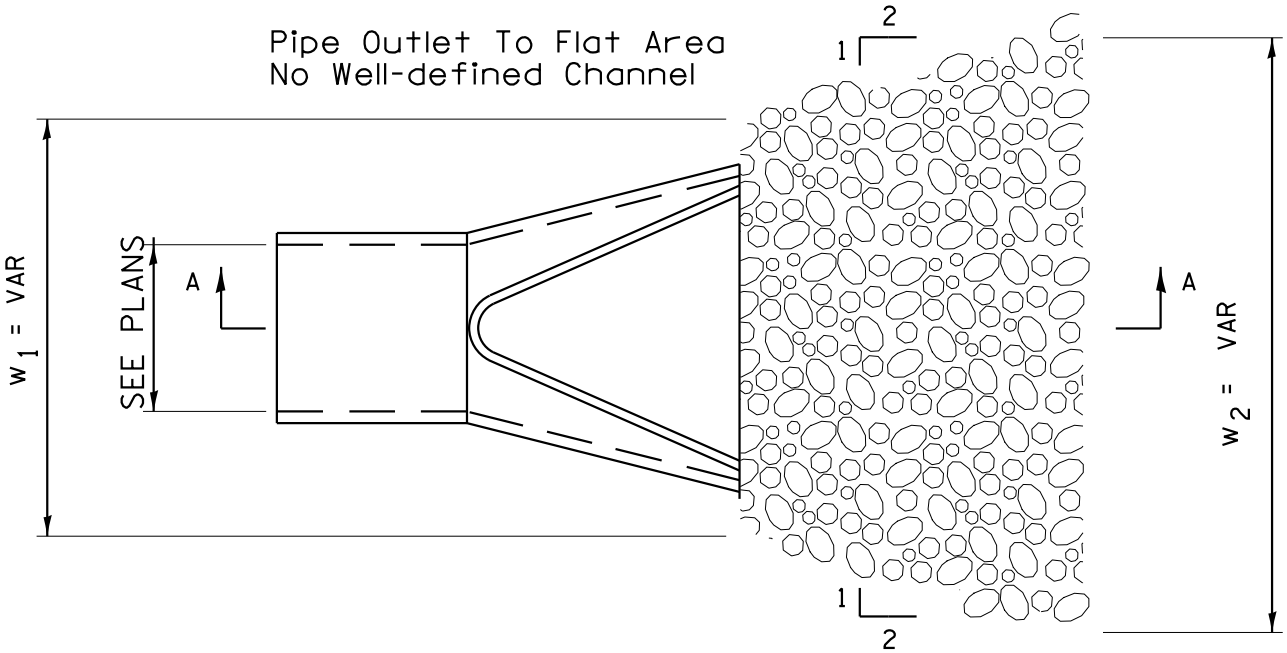

PLAN

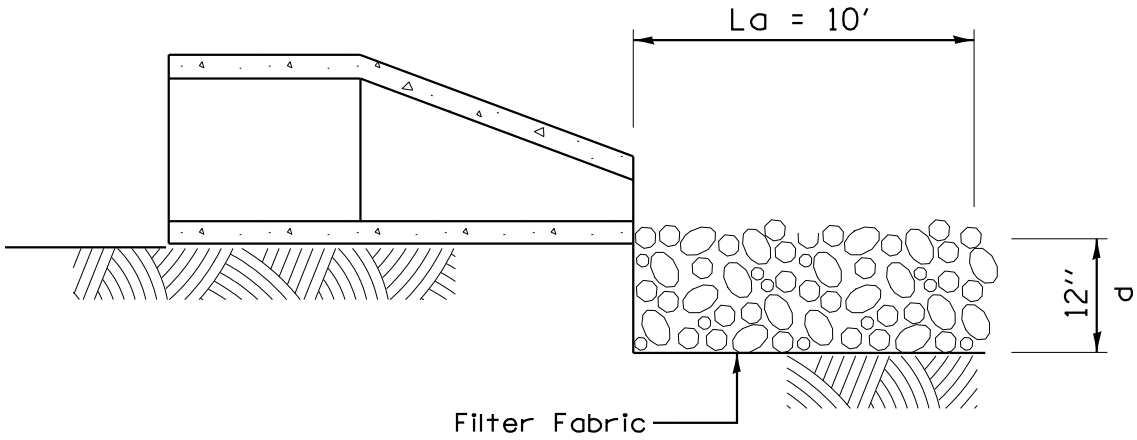

SECTION A-A

NOTES:

1. The rock riprap shall meet the IDOT requirement for the following gradation: RR 4 , Quality A

VILLAGE OF SOUTH ELGIN

REV 01/01/14
NOT TO SCALE

PIPE OUTLET/RIPRAP DETAIL

4/30/2014 I:\Crystal Lake\SELGV\140480-VIIStd Details\CADD\Details_01_01_14.dgn

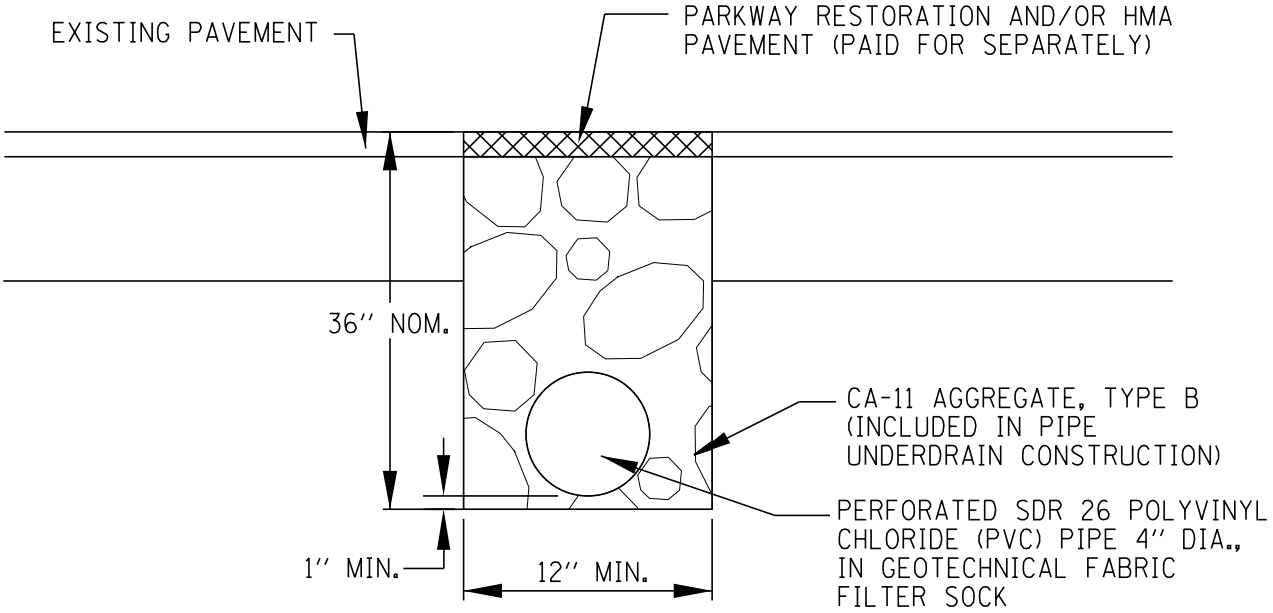

VILLAGE OF SOUTH ELGIN

REV 01/01/14
NOT TO SCALE

PIPE UNDERDRAINS 4"

4/30/2014 I:\CrystalLake\SELGV\140480-VIIStd Details\CADD\Details_01_01_14.dgn

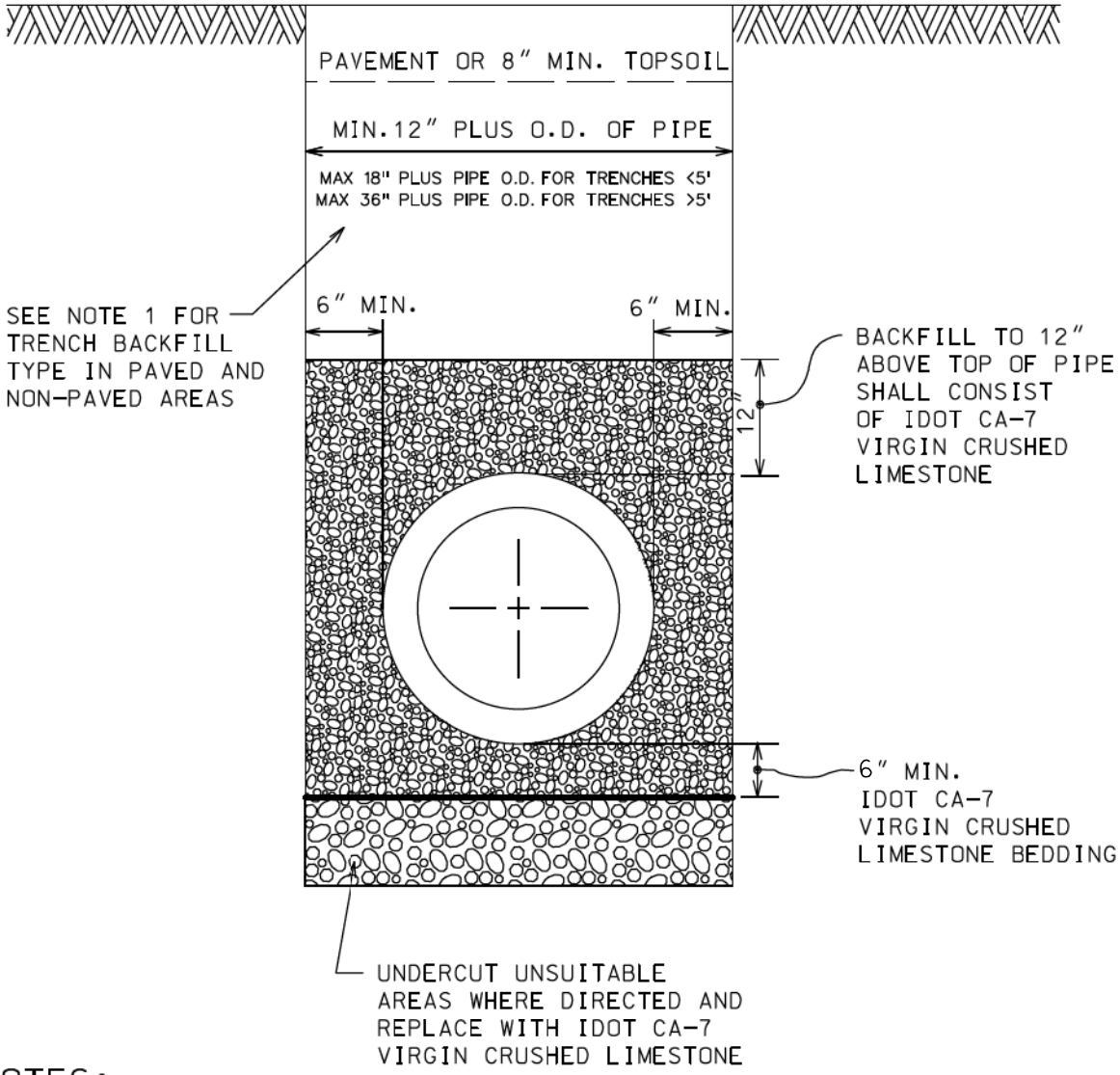

NOTES:

1. TRENCH BACKFILL MATERIAL SHALL CONSIST OF CA-7 (VIRGIN CRUSHED LIMESTONE) UNDER PAVED AREAS OR WITHIN ZONE OF INFLUENCE, OR FA-6 (CLEAN BROWN BEACH SAND) IN NON-PAVED AREAS.

2. ALL MATERIALS SHALL BE PROPERLY COMPACTED PER SPECIFICATIONS (INUNDATION OR WATER JETTING NOT ALLOWED)

3. ALL TRENCH EXCAVATIONS SHALL MEET OSHA REQUIREMENTS.

4. ALL STORM SEWER SMALLER THAN 15" DIA. THAT WILL BE PUBLICLY OWNED & MAINTAINED SHALL BE RIGID PVC PIPE, MINIMUM SDR 26 WITH PUSH-ON GASKET JOINTS.

VILLAGE OF SOUTH ELGIN

REV 09-09-14
NOT TO SCALE

PVC PIPE TRENCH DETAIL

9/9/2014 \\corp.baxwood.com\Projects\CrystalLake\SELGV\40480-VIIStd Details\CADD\Details_01-014_for village.dgn

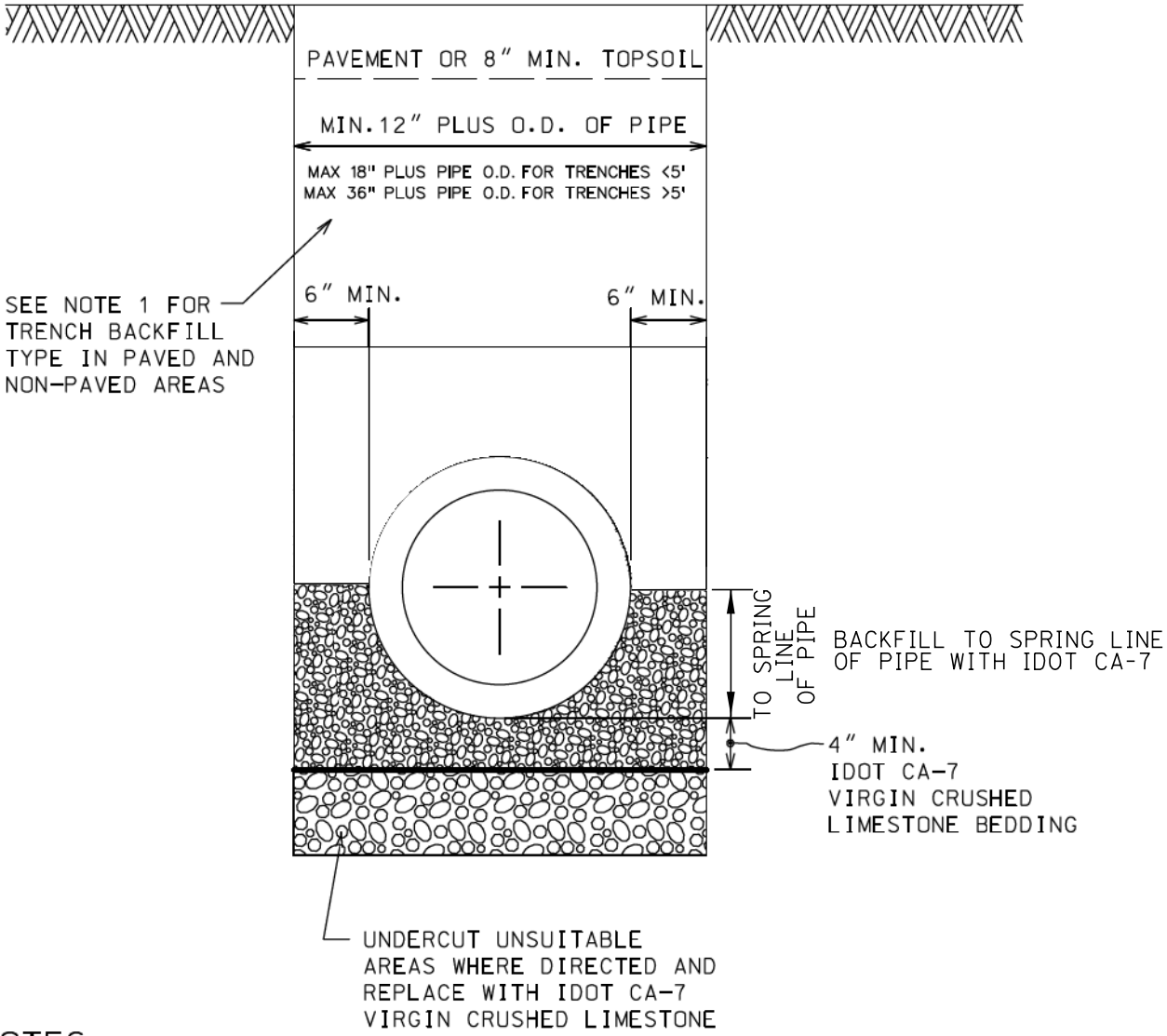

NOTES:

1. TRENCH BACKFILL MATERIAL SHALL CONSIST OF CA-7 (VIRGIN CRUSHED LIMESTONE) UNDER PAVED AREAS OR WITHIN ZONE OF INFLUENCE, OR FA-6 (CLEAN BROWN BEACH SAND) IN NON-PAVED AREAS.

2. ALL MATERIALS SHALL BE PROPERLY COMPACTED PER SPECIFICATIONS (INUNDATION OR WATER JETTING NOT ALLOWED)

3. ALL TRENCH EXCAVATIONS SHALL MEET OSHA REQUIREMENTS.

RCP TRENCH BEDDING REQUIREMENTS
6" UNDER UP TO SPRING LINE OF PIPE WITH CA-7

VILLAGE OF SOUTH ELGIN

REV 09-09-14
NOT TO SCALE

RCP TRENCH DETAIL

9/9/2014 \\corp.baxwood.com\Projects\CrystalLake\SELGV\40480-VIIStd Details\CADD\Details_01-014_ for village.dgn

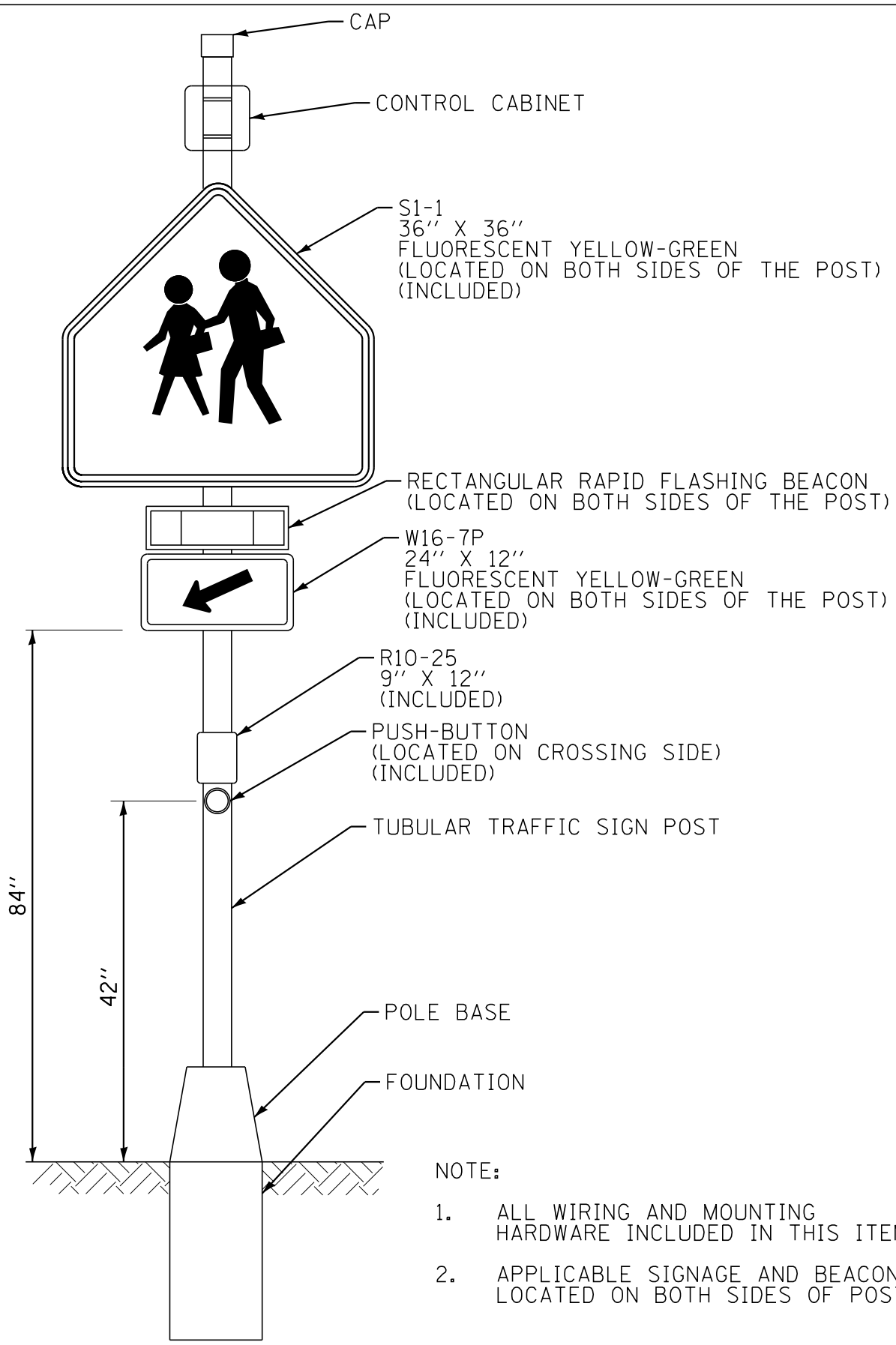

NOTE:

1. ALL WIRING AND MOUNTING HARDWARE INCLUDED IN THIS ITEM.
2. APPLICABLE SIGNAGE AND BEACON LOCATED ON BOTH SIDES OF POST.

VILLAGE OF SOUTH ELGIN

REV 01/01/14
NOT TO SCALE

RECTANGULAR RAPID FLASHING BEACON ASSEMBLY (COMPLETE) DETAIL

4/30/2014 I:\Crystal Lake\SELGV\140480-VIIStd Details\CADD\Details_01_01_14.dgn

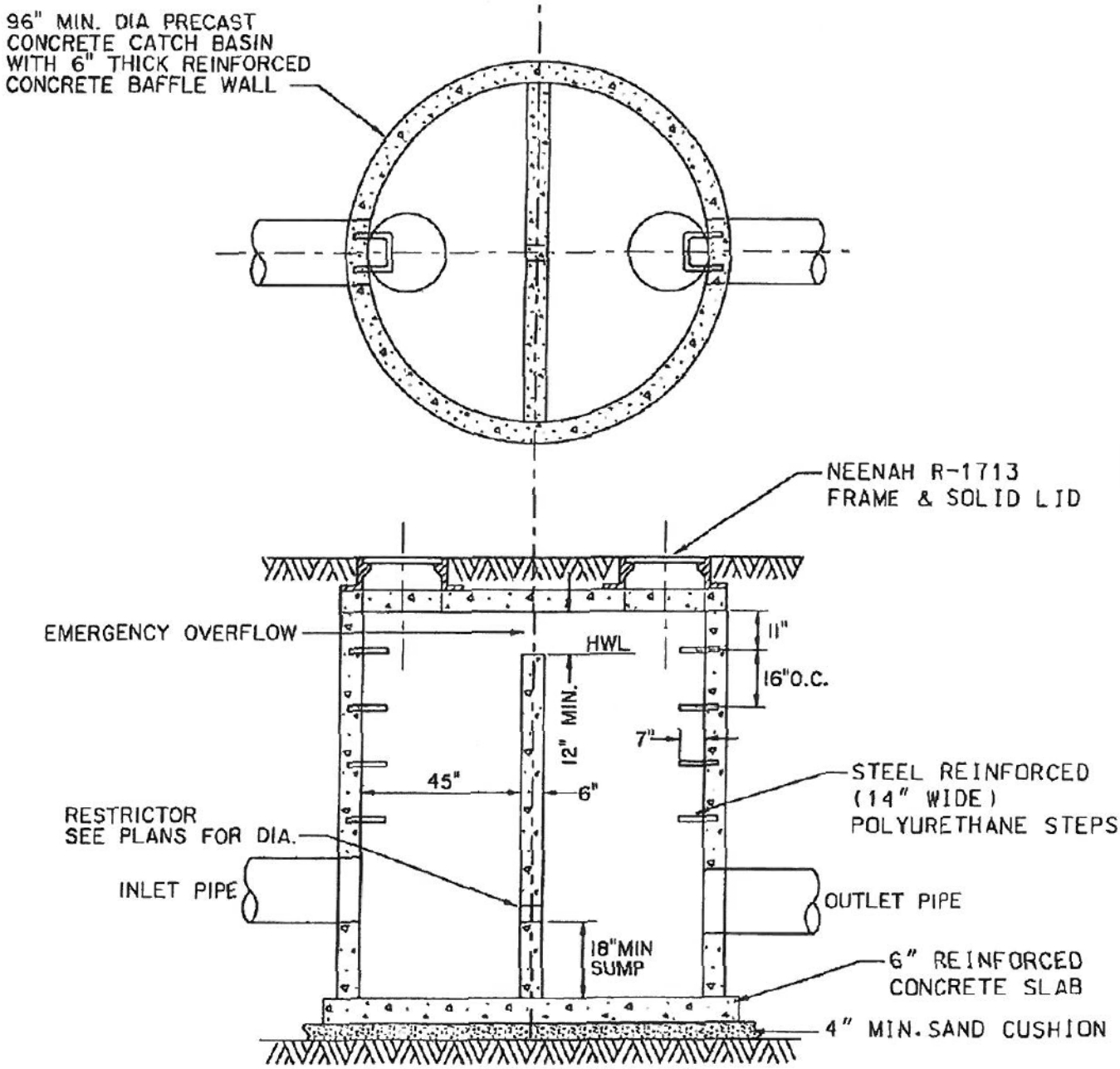

NOTES:

1. RESTRICTOR SIZE TO BE APPROVED BY THE VILLAGE ENGINEER
2. MANHOLES MUST CONFORM TO ASTM C-478.
3. MANHOLE SECTIONS TO BE TONGUE AND GROOVED.
4. NON-PRECAST OPENINGS SHALL BE CORED AND RUBBER BOOTED.
5. MORTAR ALL PIPE PENETRATIONS INSIDE AND OUTSIDE OF STRUCTURE.
6. IN "SUBMERGED" CONDITIONS, ALL PIPE PENETRATIONS TO BE CORED, RUBBER BOOTED AND INTERIOR MORTARED.

VILLAGE OF SOUTH ELGIN

REV 09-09-14
NOT TO SCALE

RESTRICTOR STRUCTURE

9/9/2014 \\corp.baxwood.com\Projects\CrystalLake\SELGV\40480-VIIStd Details\CADD\Details_01-01_14_ for village.dgn

1 ½" (38.1 mm) LETTERS
(RECESSED FLUSH)

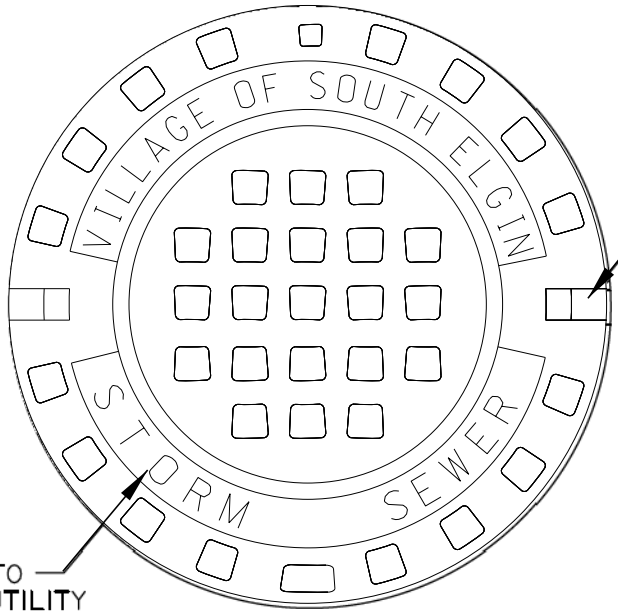

(2) CLOSED
PICKHOLES

REVISE TO
MATCH UTILITY

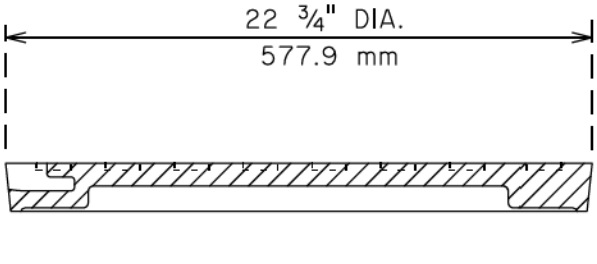

HEAVY DUTY NEENAH R-1713
MATERIAL ASTM A48 CL 35
MACHINED BEARING SURFACE
COVER WT: 125 LBS (56.7 kg)

R-1916C IN FLOODPLAIN OR OVERLAND FLOW ROUTES
AS DIRECTED BY ENGINEER (SANITARY AND WATER VAULT)

VILLAGE OF SOUTH ELGIN

REV 09-09-14
NOT TO SCALE

WATER VAULT,
SANITARY AND STORM SEWER MANHOLE COVER

9/11/2014 \\corp.baxwood.com\Projects\CrystalLake\SELGV\40480-VIIStd Details\CADD\Details_01-01-14.dgn

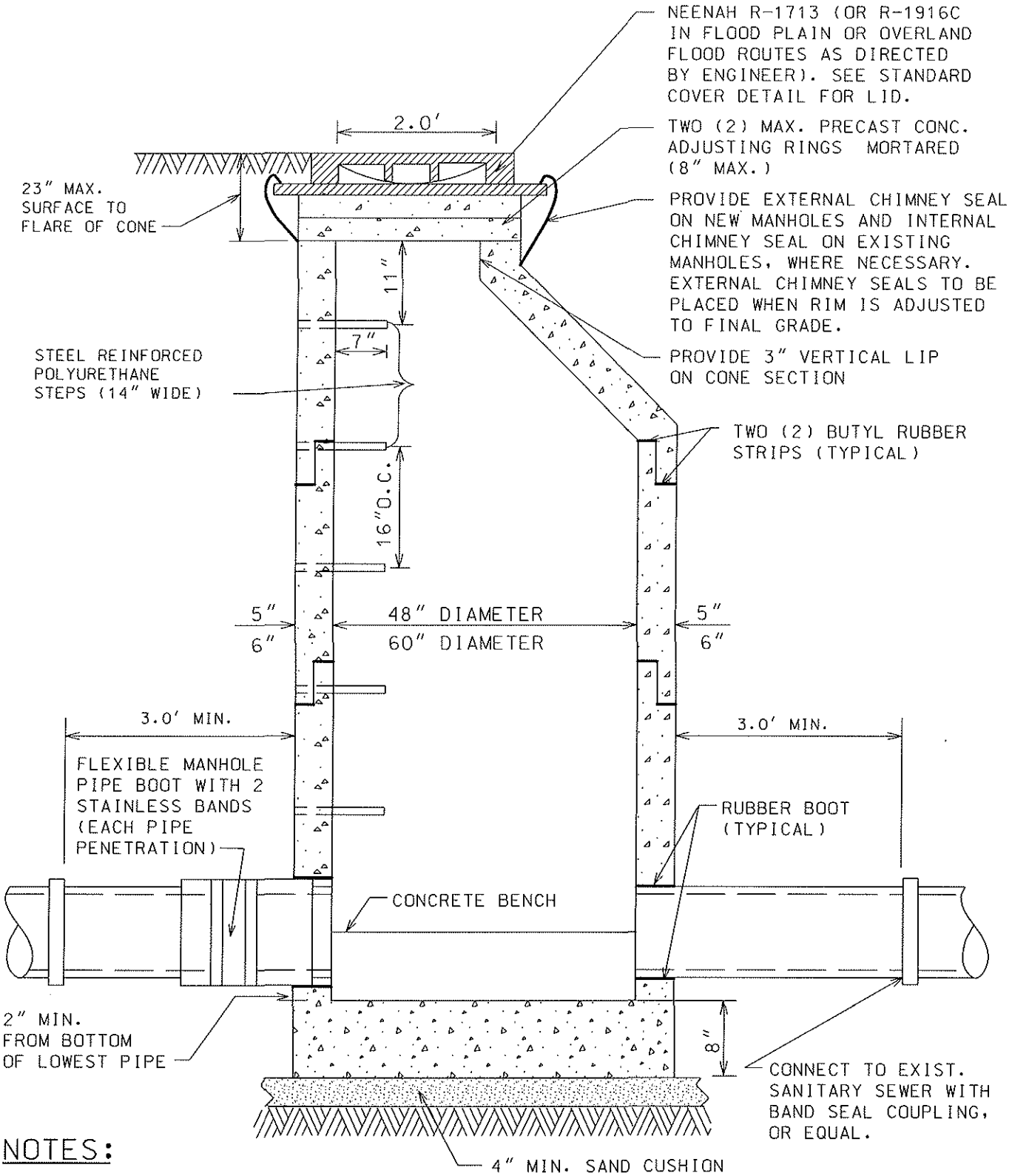

NOTES:

1. MANHOLES MUST CONFORM TO ASTM C-478.
2. MANHOLE SECTIONS TO BE TONGUE AND GROOVED.
3. BENCHES MUST BE PROVIDED IN ALL SANITARY SEWER MANHOLES
4. USE EXTERNAL LIFTING "HOLES" ONLY, BUT NOT FULL PENETRATION.
5. NON-PRECAST OPENINGS SHALL BE CORED AND RUBBER BOOTED.
6. PIPE PENETRATIONS TO BE RUBBER BOOTED AND INTERIOR MORTARED.
7. USE ECCENTRIC CONE ONLY.
8. PRIOR TO THE PLACEMENT OF FINAL LAYER OF ROADWAY, FRAMES AND ADJUSTING RINGS LOCATED WITHIN PAVED AREAS SHALL BE SET IN AN IDOT APPROVED CONCRETE "SI" MIXTURE.

NOT TO SCALE

DATE: 7-27-10

SANITARY MANHOLE DETAIL

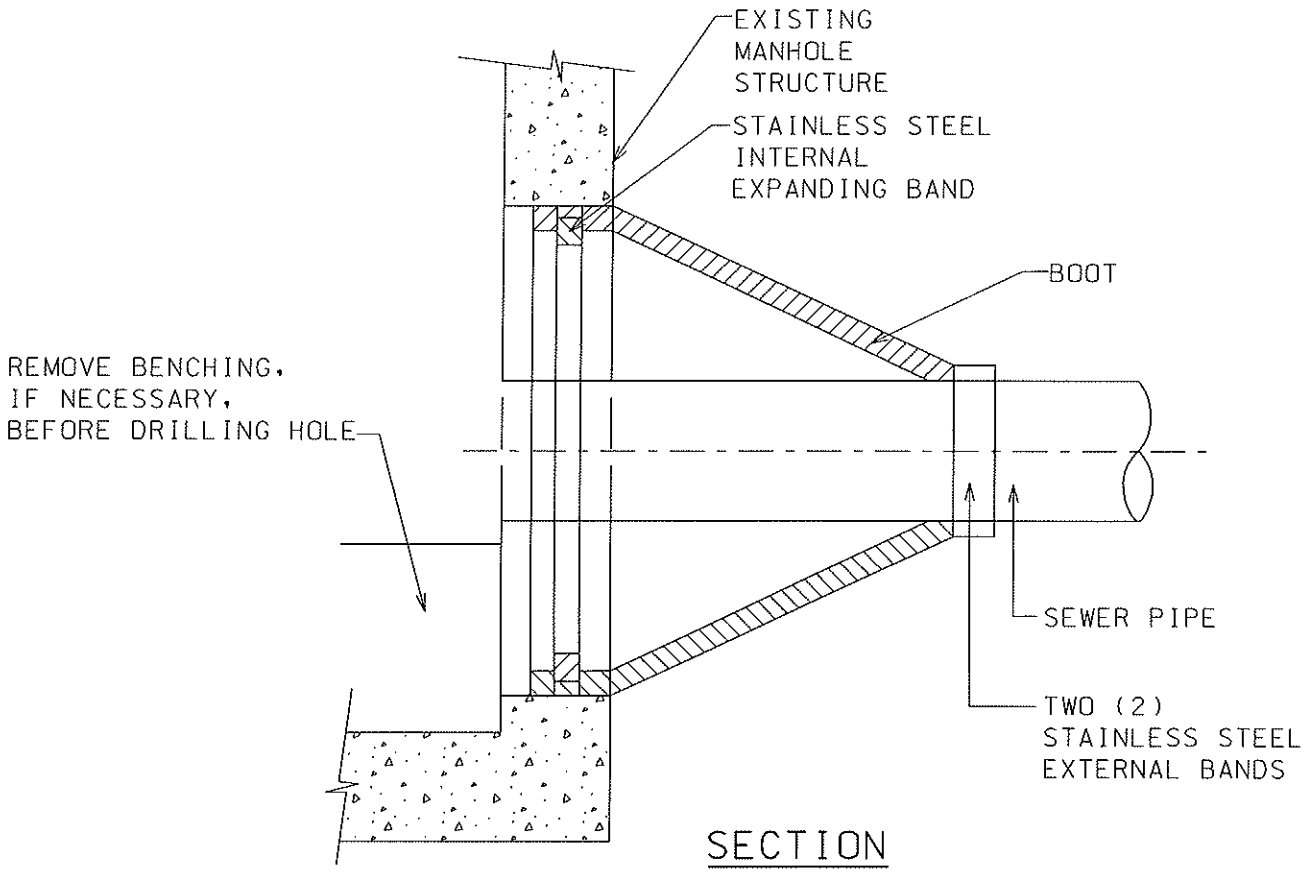

SECTION

NOTES:

1. CORE-DRILL CIRCULAR OPENING IN MANHOLE WALL OF DIAMETER TO FIT THE REQUIRED BOOT SIZE.
2. KOR-N SEAL FLEXIBLE RUBBER BOOT (MANUFACTURED BY NATIONAL POLLUTION CONTROL SYSTEMS, INC. OR AS APPROVED BY THE ENGINEERING DEPARTMENT) SHALL BE USED FOR WATERTIGHT CONNECTION.
3. CUT, SHAPE AND SLOPE NEW INVERT CHANNEL IN THE EXISTING CONCRETE BENCH FOR SMOOTH FLOW FROM NEW SANITARY SEWER CONNECTION.
4. CLEAN EXISTING MANHOLE OF ANY DIRT, CONCRETE OR DEBRIS WHICH MAY ACCUMULATE DURING THE CONSTRUCTION PROCESS.

NOT TO SCALE

DATE: 3-31-09

SANITARY SEWER CONNECTION TO EXISTING MANHOLE

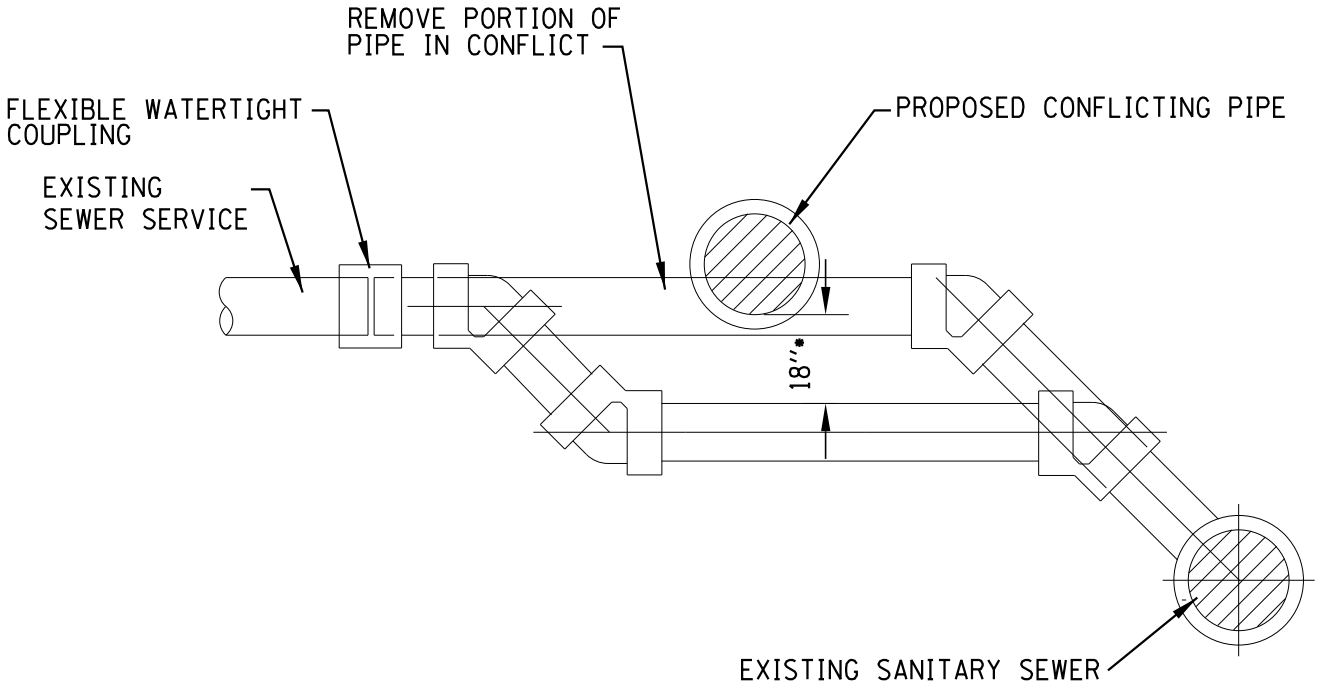

* 18" SEPARATION REQUIRED WHEN UNDER WATER MAIN.

WHEN REPLACEMENT OF SANTITARY SERVICE IS REQUIRED ABOVE PROPOSED STORM SEWER OR WATER MAIN THE ENTIRE SERVICE LINE ACROSS THE TRENCH SHALL BE REPLACED WITH DUCTILE IRON PIPE OR C900 PVC AND SHALL BE CONNECTED WITH NON-SHEAR COUPLINGS IN UNDISTURBED GROUND OUTSIDE THE TRENCH WIDTH ON BOTH SIDES.

VILLAGE OF SOUTH ELGIN

REV 01/01/14
NOT TO SCALE

SANITARY SEWER SERVICE REPLACEMENT

4/30/2014 I:\Crystal Lake\SELGV\140480-VIIStd Details\CADD\Details_01_01_14.dgn

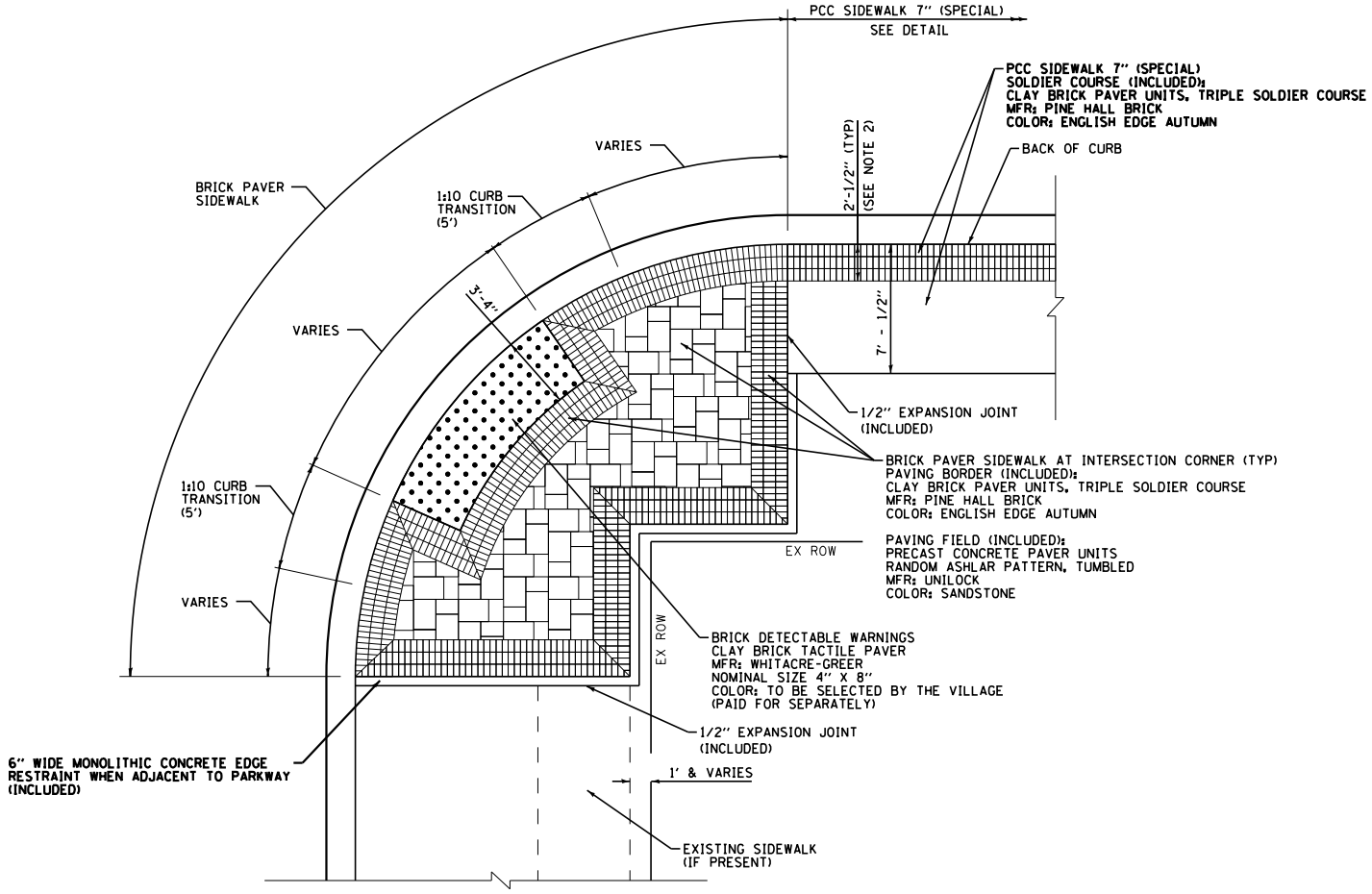

PLAN VIEW

NOTES:

1. THE THICKNESS OF THE BRICK PAVER SIDEWALK, BRICK DETECTABLE WARNINGS, AND CONCRETE PAVER UNITS MAY NOT MATCH. THE CONTRACTOR SHALL INSTALL ADDITIONAL HOT-MIX ASPHALT SETTING BED AS NEEDED SO THE TOP OF ALL PAVERS ARE FLUSH.
2. THE CONTRACTOR SHALL VERIFY THE WIDTH REQUIRED TO SET THE BRICK PAVERS PRIOR TO POURING CONCRETE.
3. THE PATTERN, LAYOUT, AND SEQUENCE OF OPERATION SHALL BE APPROVED BY THE ENGINEER PRIOR TO CONSTRUCTION.
4. PROVIDE CONTRACTION JOINTS AS DETERMINED BY THE ENGINEER.
5. POLYMERIC SAND SHALL BE RG+ AS MANUFACTURED BY TECHNISEAL, COLOR: PRAIRIE TAN, OR AS SELECTED BY THE VILLAGE.

THE VILLAGE OF SOUTH ELGIN
Where tradition meets the future

REV 10/24/16
NOT TO SCALE

SIDEWALK STREETSCAPE DETAIL

SHEET 1 OF 2

10/24/2016 I:\CrystalLake\SELGV\140480-VIIIStd Details\CADD\Details_01_01_14.dgn

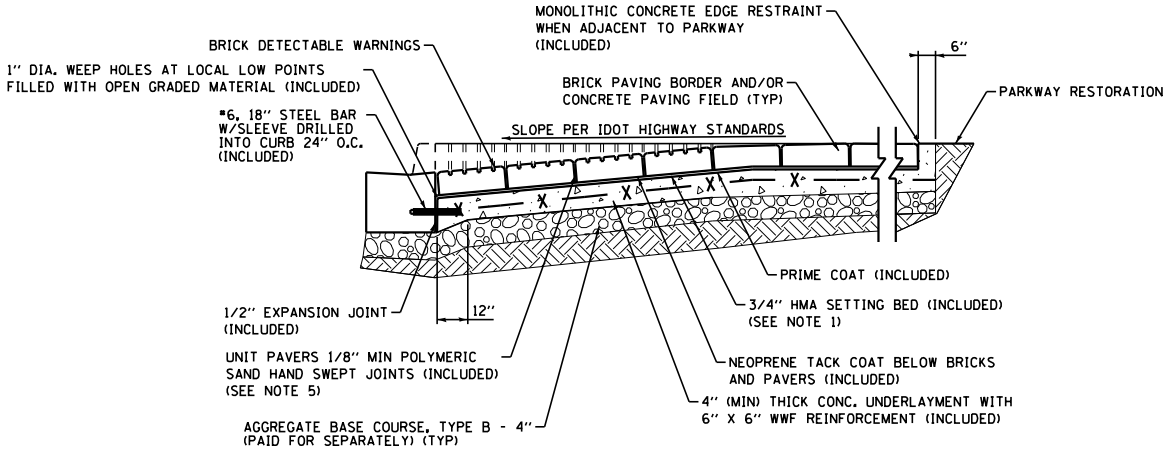

PROFILE VIEW
BRICK PAVER SIDEWALK
BRICK DETECTABLE WARNINGS

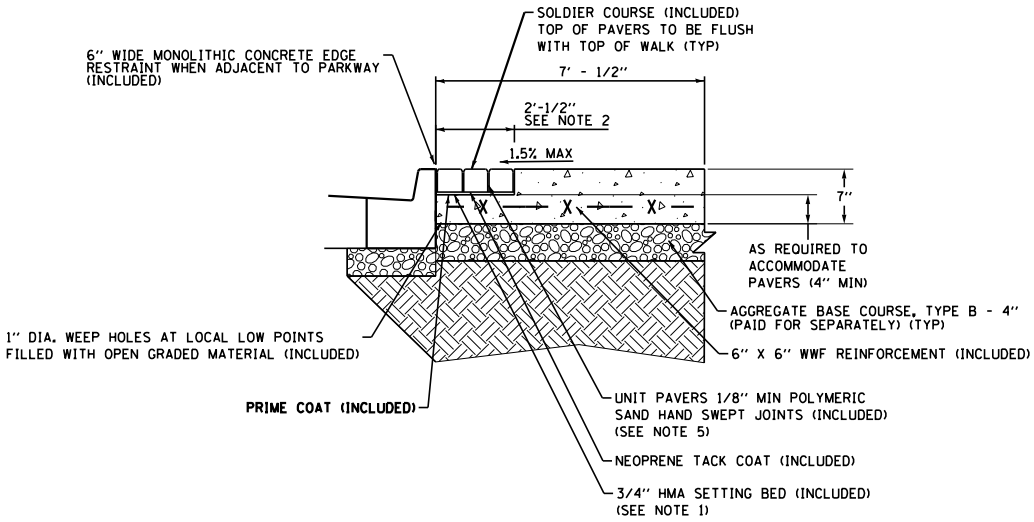

PROFILE VIEW
PCC SIDEWALK 7" (SPECIAL)

THE VILLAGE OF SOUTH ELGIN
Where tradition meets the future

REV 10/24/16
NOT TO SCALE

SIDEWALK STREETSCAPE DETAIL

SHEET 2 OF 2

10/24/2016 I:\Crystal Lake\SELGV\140480-VIIIStd Details\CADD\Details_01_01_14.dgn

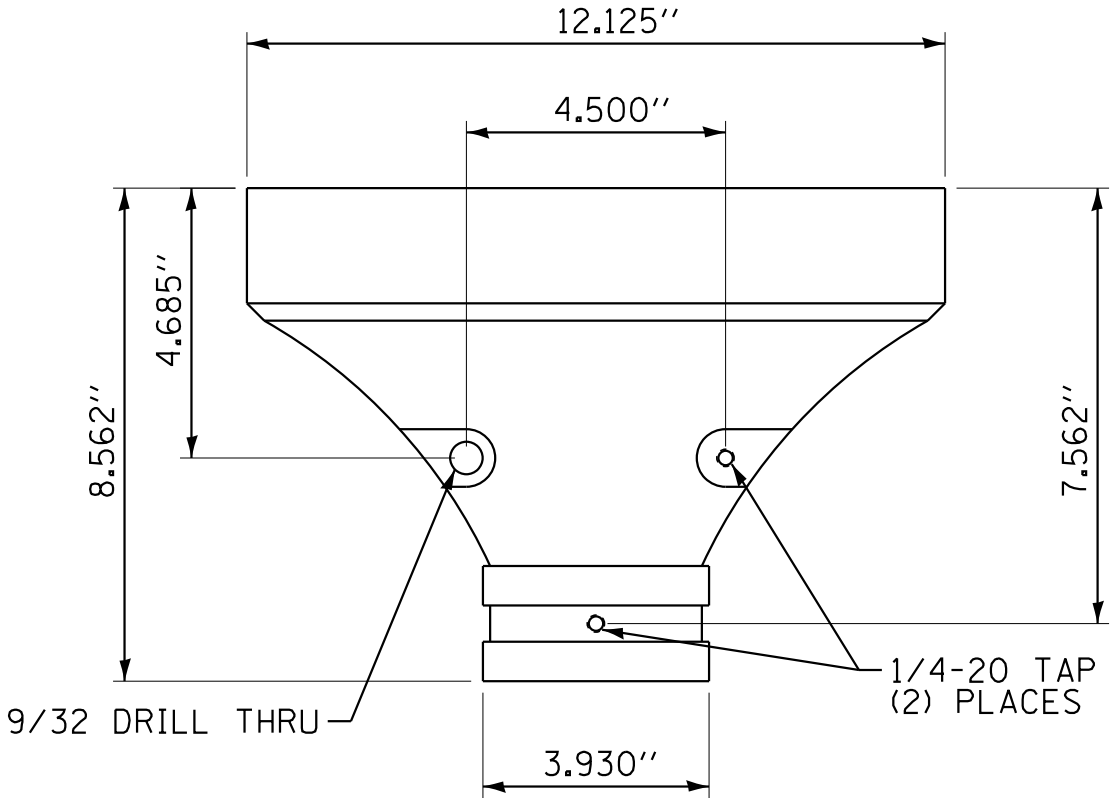

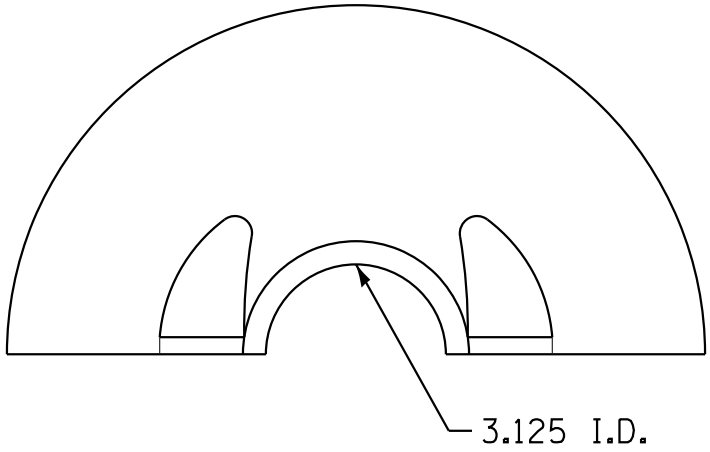

ALUMINUM CASTING
SANDBLAST BEFORE POWDERCOAT
BLACK RIVER POWDERCOAT

VILLAGE OF SOUTH ELGIN

REV 09/30/14
NOT TO SCALE

SIGN POST BASE COVER

9/30/2014 I:\CrystalLake\SELGV\140480-VIIStd Details\CADD\Details_01_01_14.dgn

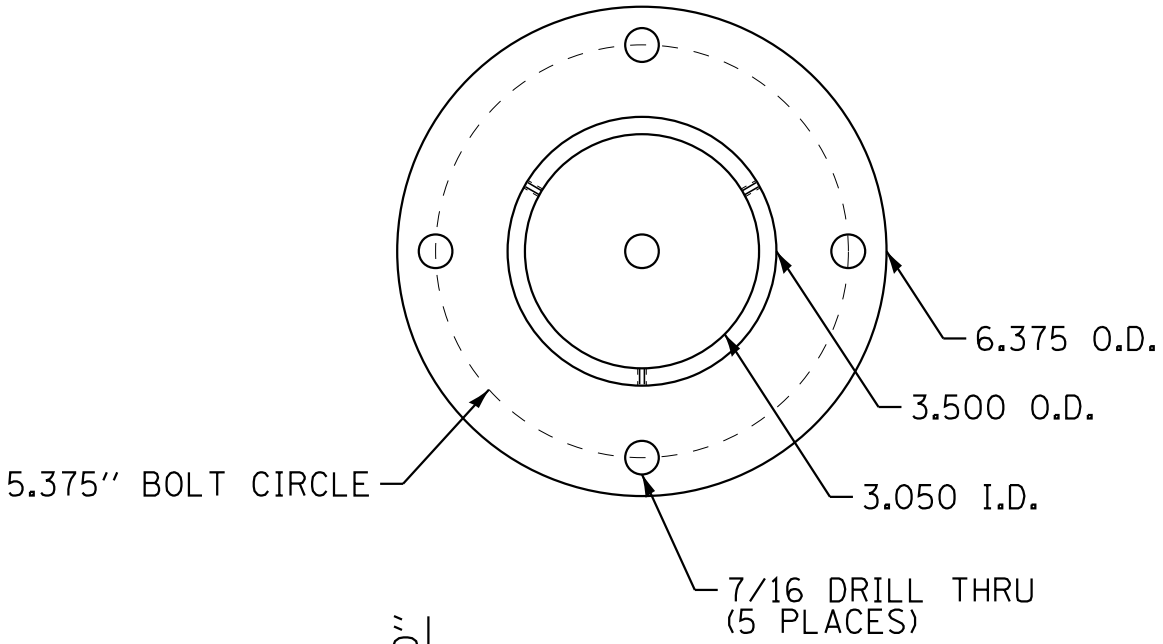

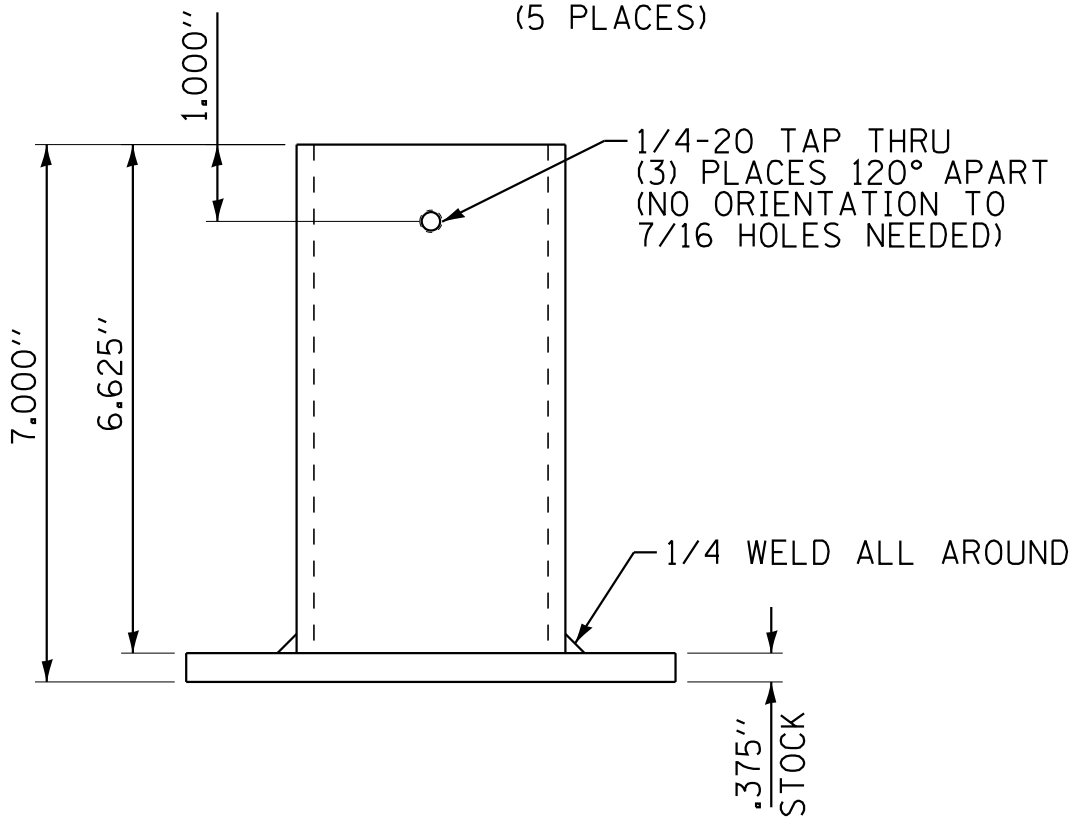

WELDED STEEL CONSTRUCTION
BLACK RIVER POWERCOAT

VILLAGE OF SOUTH ELGIN

REV 09/30/14
NOT TO SCALE

SIGN POST BASE

9/30/2014 I:\CrystalLake\SELGV\140480-VIIStd Details\CADD\Details_01_01_14.dgn

Filter Fabric

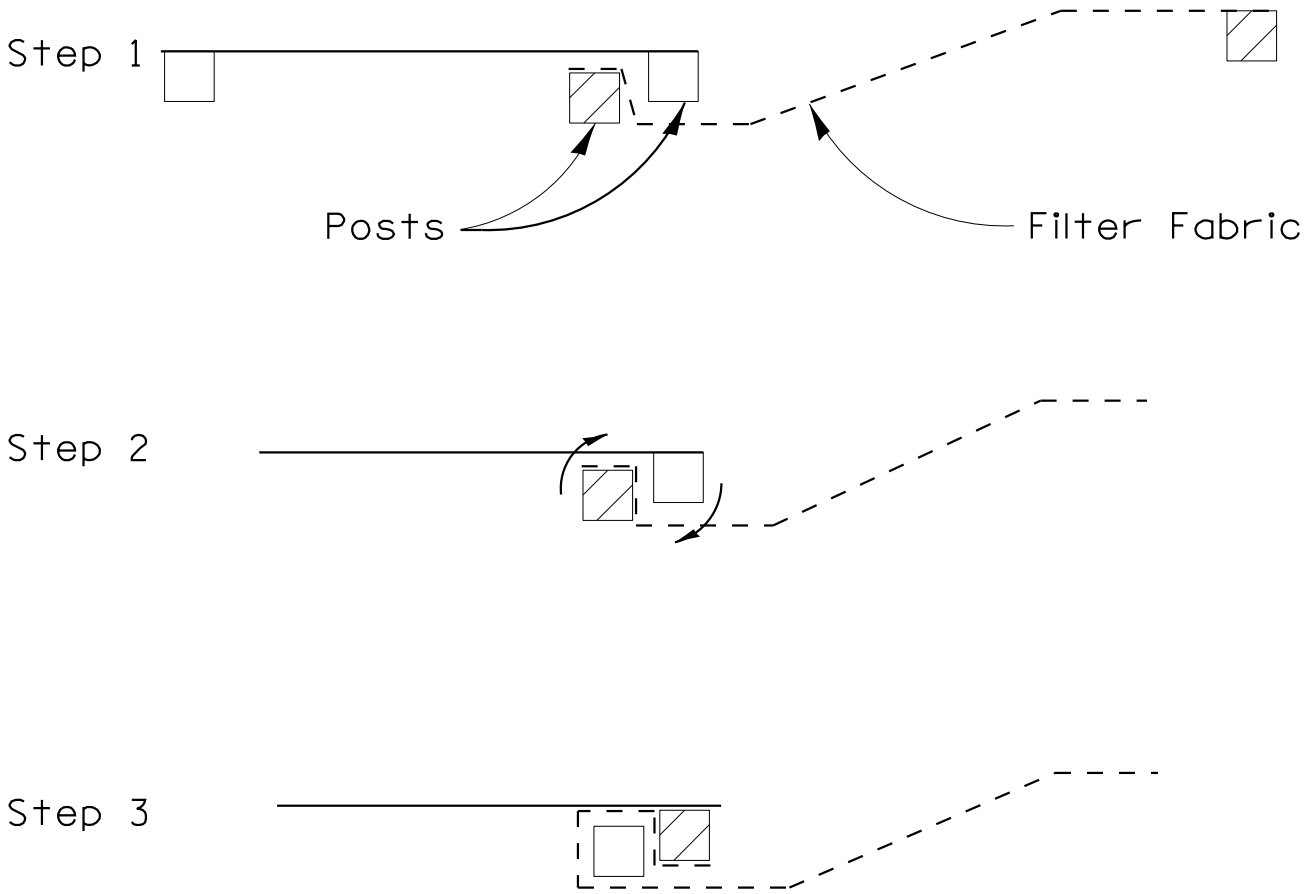

ATTACHING TWO SILT FENCES

NOTES:

1. PLace the end post of the second fence inside the end post of the first fence.

2. Rotate both posts at least 180 degrees in a clockwise direction to create a tight seal with the fabric material.

3. Drive both posts a minimum of 18 inches into the ground and bury the flap.

VILLAGE OF SOUTH ELGIN

REV 01/01/14
NOT TO SCALE

SILT FENCE

I:\Crystal Lake\SELGV\140480-VIIStd Details\CADD\Details_01_01_14.dgn
4/30/2014

NOTES:

1. CONCENTRIC CONE REQUIRED
2. USE 4'-0" DIAMETER
   FOR WATER MAIN SIZES 4" THRU 8"
   5'-0" FOR SIZES 10" AND GREATER

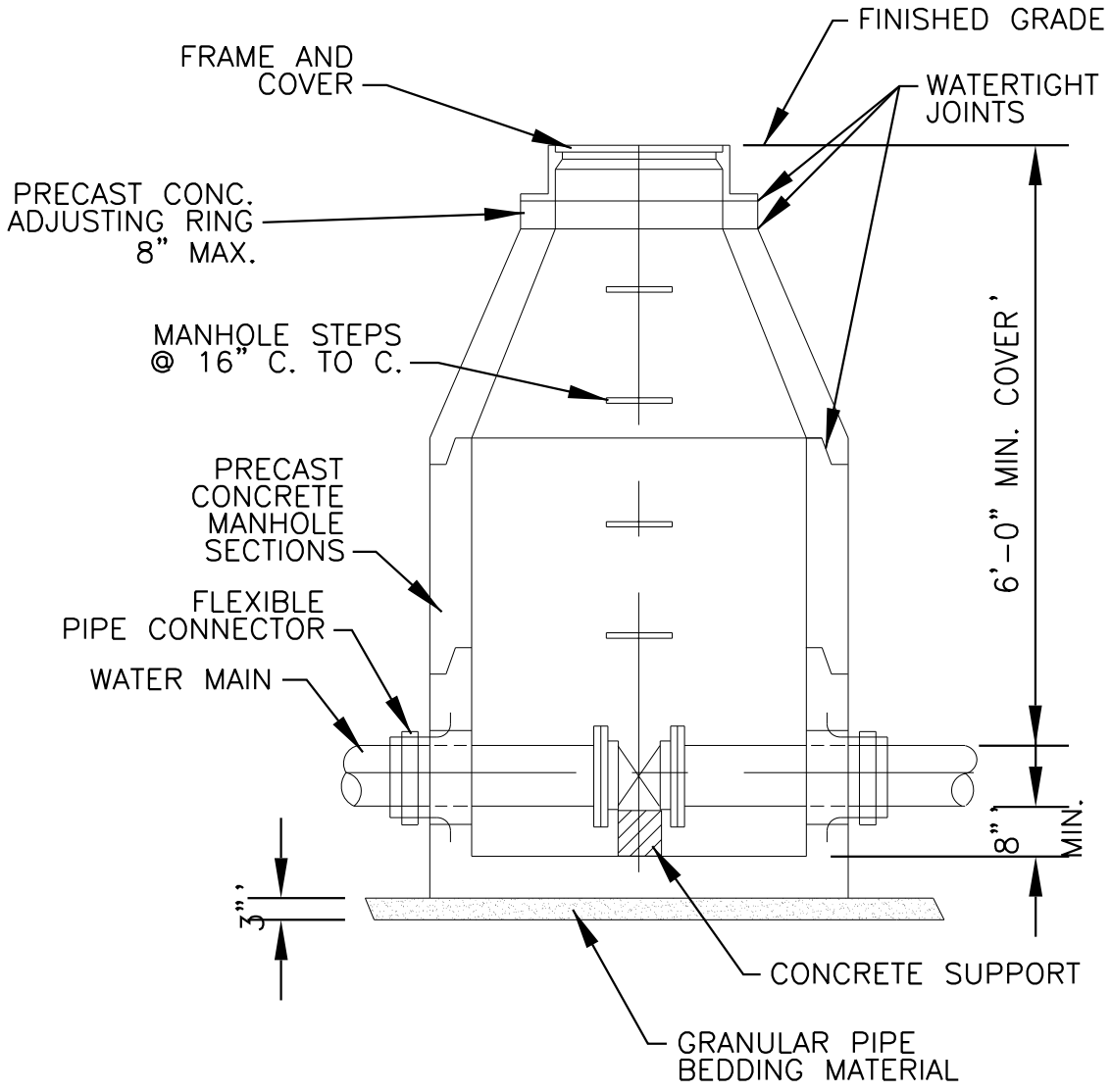

VILLAGE OF SOUTH ELGIN

REV 09-09-14
NOT TO SCALE

STANDARD VALVE VAULT DETAIL

9/9/2014 \\corp.baxwood.com\Projects\CrystalLake\SELGV\40480-VIIStd Details\CADD\Details_01_01_14_ for village.dgn

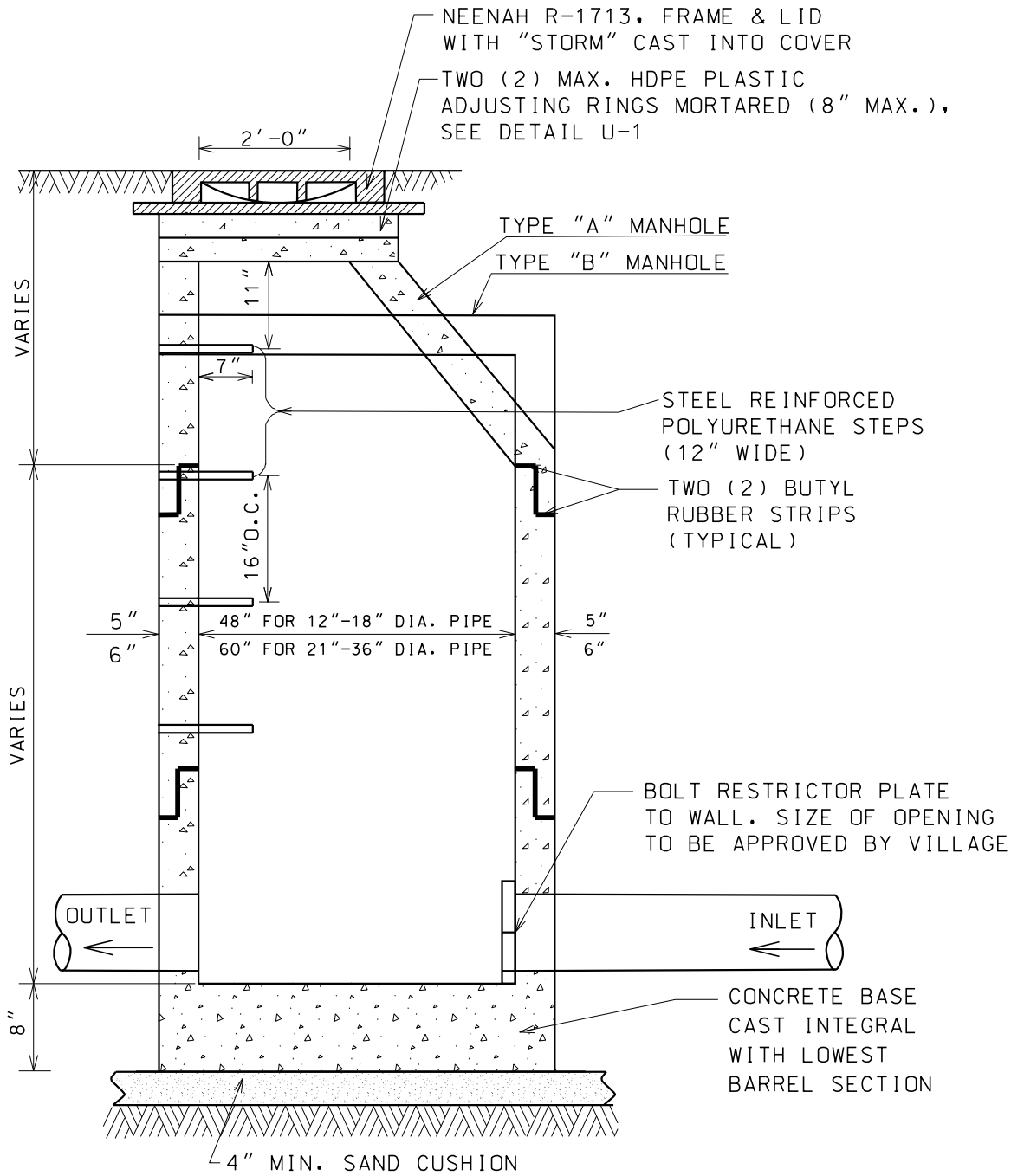

NOTES:

1. RESTRICTOR SIZE TO BE APPROVED BY THE VILLAGE ENGINEER. MINIMUM RESTRICTOR DIAMETER IS 3".
2. MANHOLES MUST CONFORM TO ASTM C-478.
3. MANHOLE SECTIONS TO BE TONGUE AND GROOVED.
4. BENCHES MUST BE PROVIDED IN ALL STORM SEWER MANHOLES.
5. NON-PRECAST OPENINGS SHALL BE CORED, RUBBER BOOTED.
6. MORTAR ALL PIPE PENETRATIONS INSIDE AND OUTSIDE OF THE STRUCTURE.
7. IN "SUBMERGED" CONDITIONS, ALL PIPE PENETRATIONS TO BE CORED, RUBBER BOOTED AND INTERIOR MORTARED.
8. PRIOR TO THE PLACEMENT OF FINAL LAYER OF ROADWAY, FRAMES AND ADJUSTING RINGS LOCATED WITHIN PAVED AREAS SHALL BE SET IN AN IDOT APPROVED CONCRETE "SI" MIXTURE.

VILLAGE OF SOUTH ELGIN REVISED:01-01-14 REV 09-09-14 NOT TO SCALE

TYPE A & B STORM MANHOLE WITH RESTRICTOR

9/9/2014 \\corp.baxwood.com\Projects\CrystalLake\SELGV\40480-VIIStd Details\CADD\Details_01_01_14_ for village.dgn

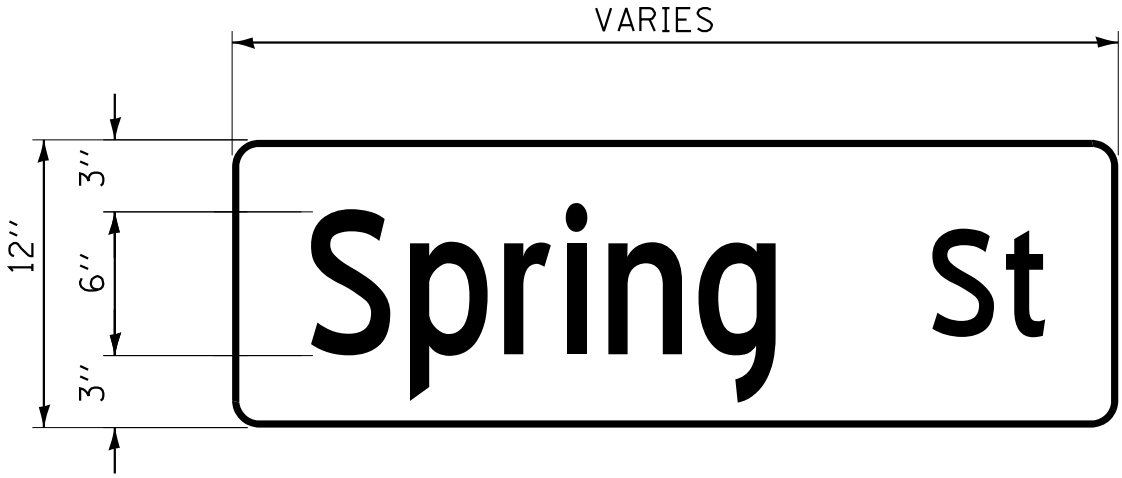

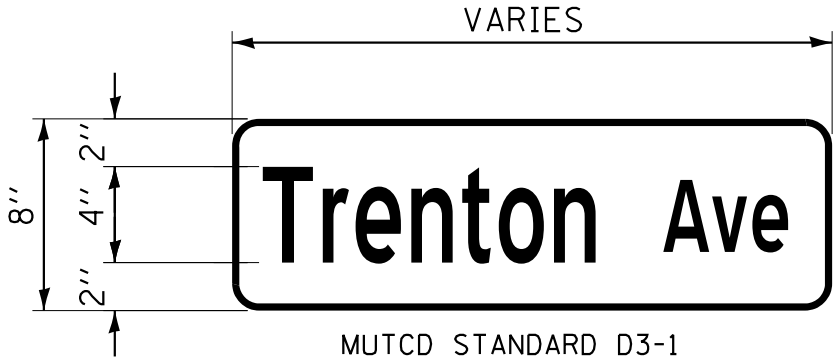

FONTS:
FHWA 2000
SERIES C

MUTCD STANDARD D3-1

NOTES:

1. SIGNS SHALL MEET CURRENT MUTCD REQUIREMENTS FOR RETROREFLECTIVITY.

2. LETTERING AND BORDER SHALL BE WHITE. STREET SIGN SHALL BE GREEN.

3. FOR TWO LANE STREETS 25MPH OR LESS LETTERING SHALL BE COMPOSED OF A COMBINATION OF 4'' INITIAL UPPER CASE LETTER AND 3'' LOWER CASE LETTERS ON AN 8'' HIGH SIGN.

4. FOR TWO LANE STREETS > 25MPH LETTERING SHALL BE COMPOSED OF A COMBINATION OF 6'' INITIAL UPPER CASE LETTER AND 4'' LOWER CASE LETTERS ON A 12'' HIGH SIGN.

5. SUPPLEMENTARY LETTERING TO INDICATE TYPE OF STREET SHALL BE 75% OF SIZE OF STREET NAME. CONVENTIONAL ABBREVIATIONS SHALL BE USED.

VILLAGE OF SOUTH ELGIN

REV 09/30/14
NOT TO SCALE

STREET NAME SIGN

9/30/2014 I:\CrystalLake\SELGV\140480-VIIStd Details\CADD\Details_01_01_14.dgn

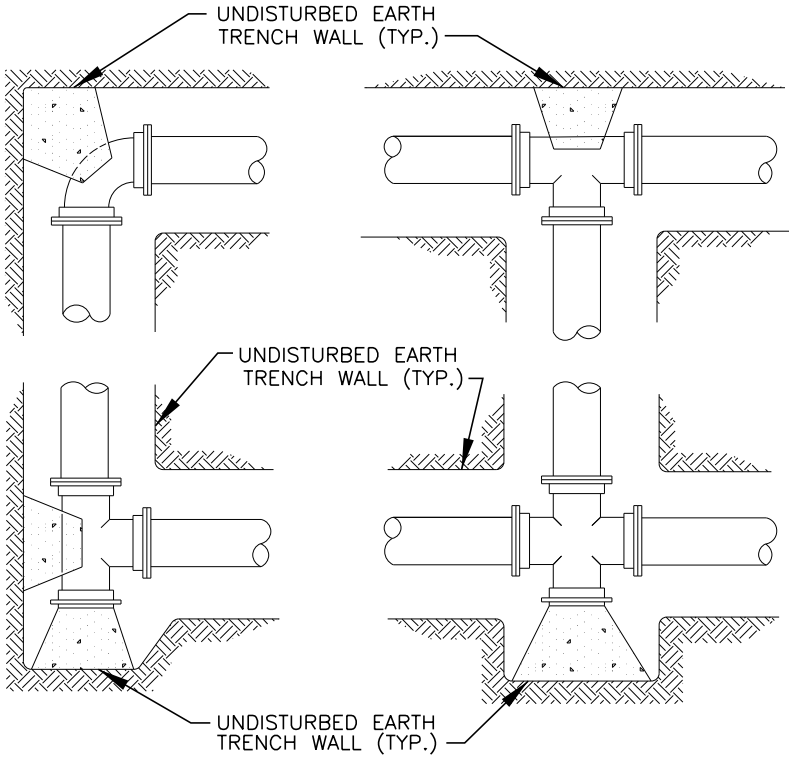

PLANS

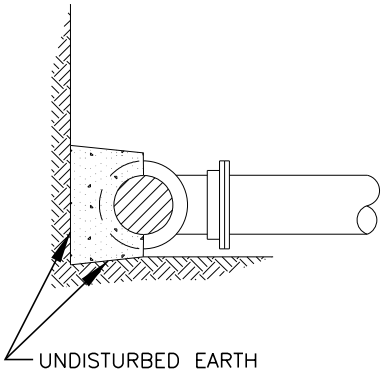

SECTIONS

NOTES

1. PROVIDE PRECAST OR CAST-IN-PLACE CONCRETE THRUST BLOCKS OF ADEQUATE SIZE AND THRUST BEARING SURFACE TO PREVENT MOVEMENT OF PIPELINE UNDER PRESSURE.
2. PLACE THE BASE AND THRUST BEARING SIDES OF THRUST BLOCK DIRECTLY AGAINST UNDISTURBED EARTH.
3. PLACE THRUST BLOCKING SO THE FITTING JOINTS WILL BE ACCESSIBLE FOR REPAIR.

TYPICAL THRUST BLOCK INSTALLATIONS

NO SCALE

VILLAGE OF SOUTH ELGIN

REV 01/01/14
NOT TO SCALE

TYPICAL THRUST BLOCK INSTALLATION

4/30/2014 I:\Crystal Lake\SELGV\140480-VIIStd Details\CADD\Details_01_01_14.dgn

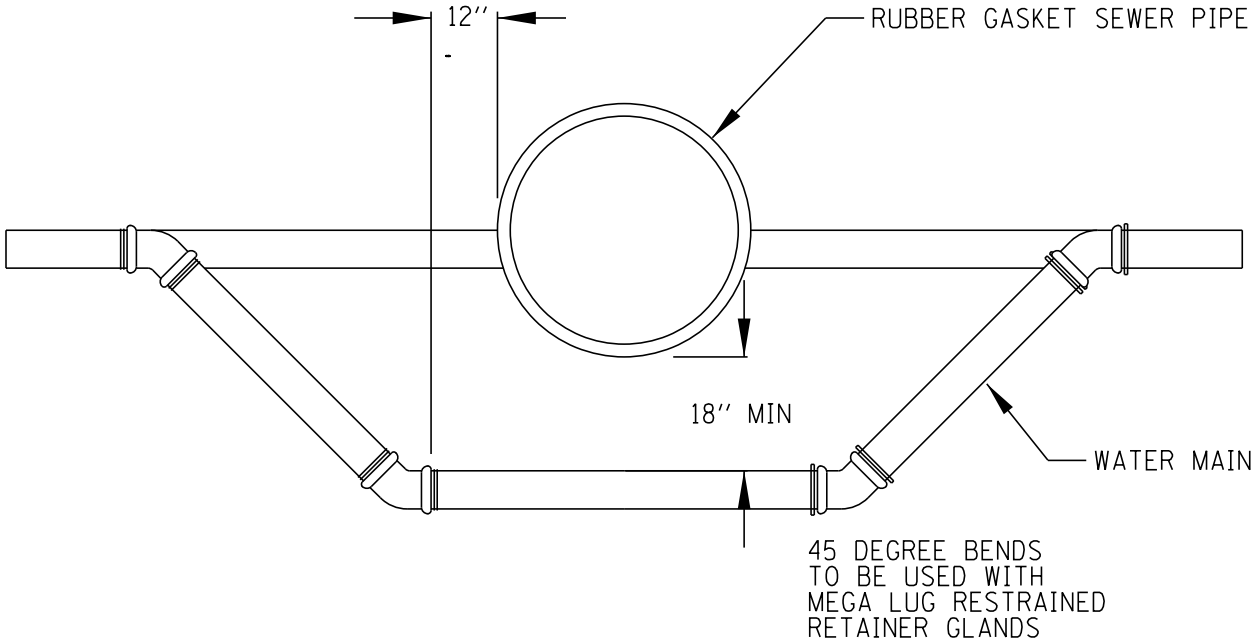

ALL NEW WATER MAIN AND FITTINGS SHALL BE DUCTILE IRON.
THE PIPE SHALL BE OF THE CLASS S2.

4'' COMPACTED GRANULAR MATERIAL (CA-6) BEDDING
BENEATH ADJUSTED WATER MAIN SHALL BE EXTENDED
TO THE SPRINGLINE OF THE PIPE.

ALL NEW WATER MAIN SHALL BE DISINFECTED BY
CAREFULLY SWABBING WITH A CHLORINE SOLUTION.

VILLAGE OF SOUTH ELGIN

REV 01/01/14
NOT TO SCALE

WATER MAIN RELOCATION DETAIL

4/30/2014 I:\CrystalLake\SELGV\140480-VIIStd Details\CADD\Details_01_01_14.dgn

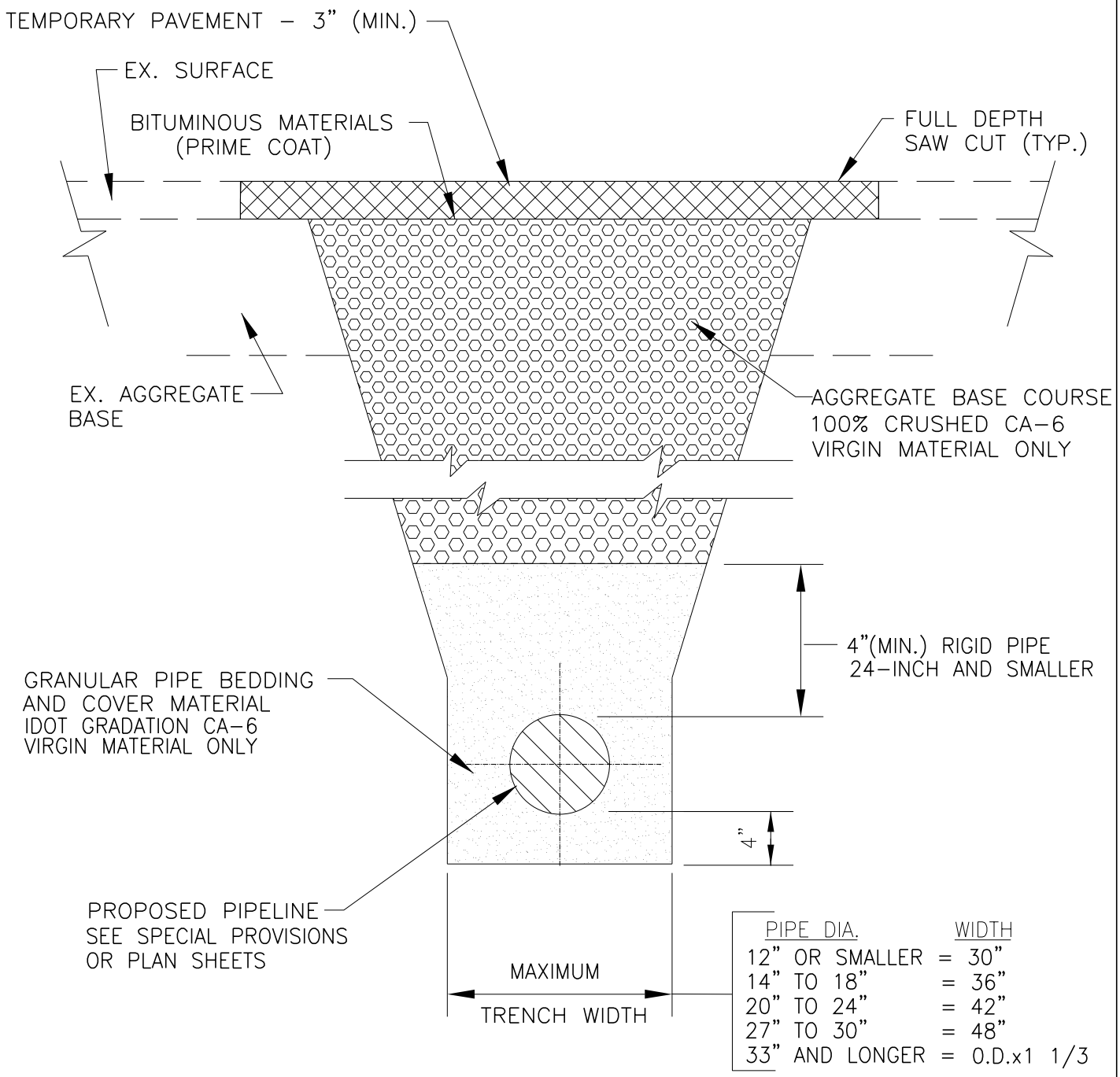

PIPE DIA.	WIDTH
12" OR SMALLER	= 30"
14" TO 18"	= 36"
20" TO 24"	= 42"
27" TO 30"	= 48"
33" AND LONGER	= O.D.x1 1/3

FOR PAVEMENT WITH AGGREGATE BASE AND COMPACTED GRANULAR BACKFILL MATERIAL

VILLAGE OF SOUTH ELGIN

REV 01/01/14
NOT TO SCALE

TYPICAL WATER MAIN TRENCH DETAIL

4/30/2014 I:\Crystal Lake\SELGV\140480-VIIStd Details\CADD\Details_01_01_14.dgn

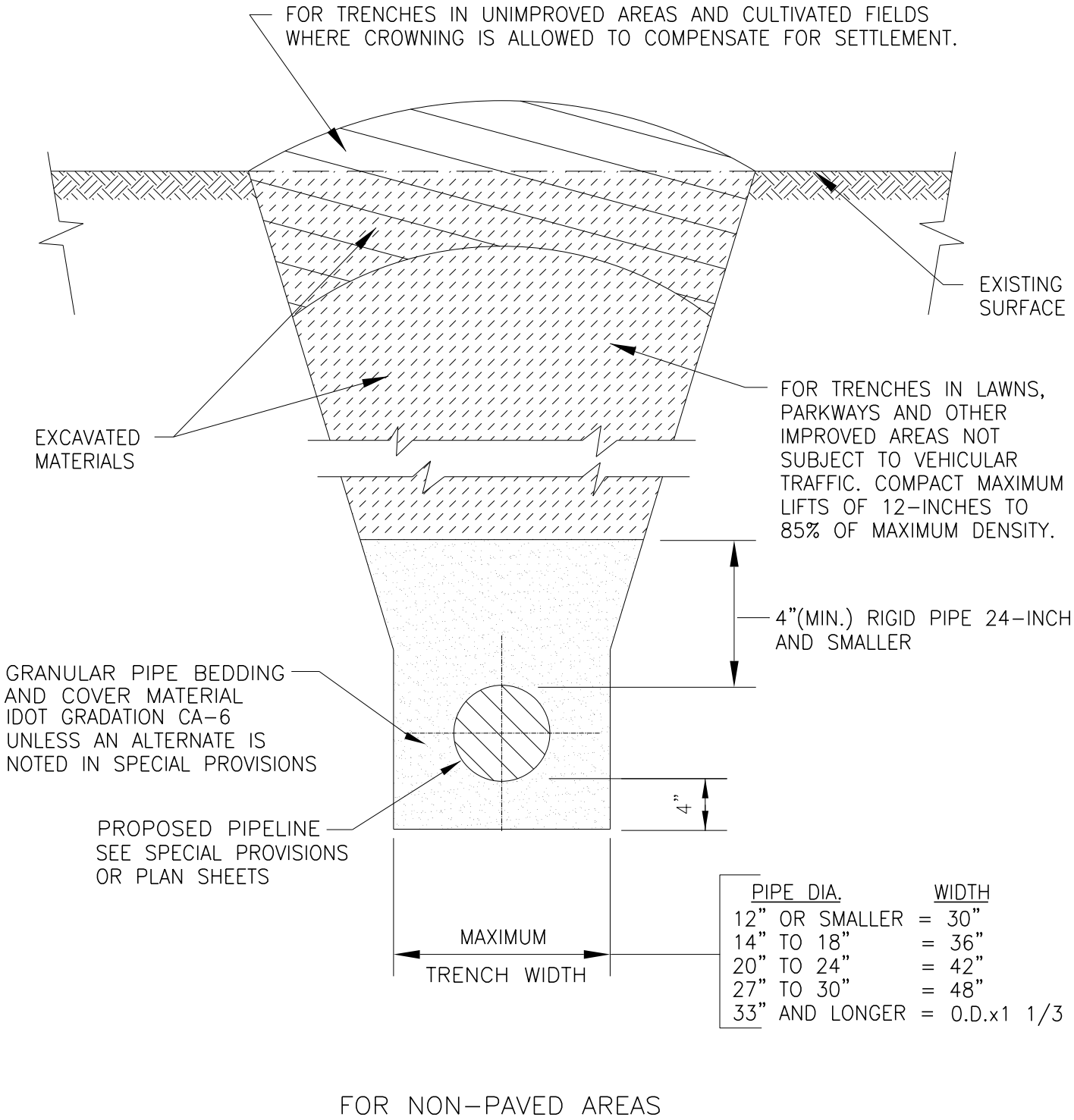

PIPE DIA.	WIDTH
12" OR SMALLER	= 30"
14" TO 18"	= 36"
20" TO 24"	= 42"
27" TO 30"	= 48"
33" AND LONGER	= O.D.x1 1/3

FOR NON-PAVED AREAS

VILLAGE OF SOUTH ELGIN

REV 01/01/14
NOT TO SCALE

TYPICAL WATER MAIN TRENCH DETAIL

4/30/2014 I:\Crystal Lake\SELGV\140480-VIIISTd Details\CADD\Details_01_01_14.dgn

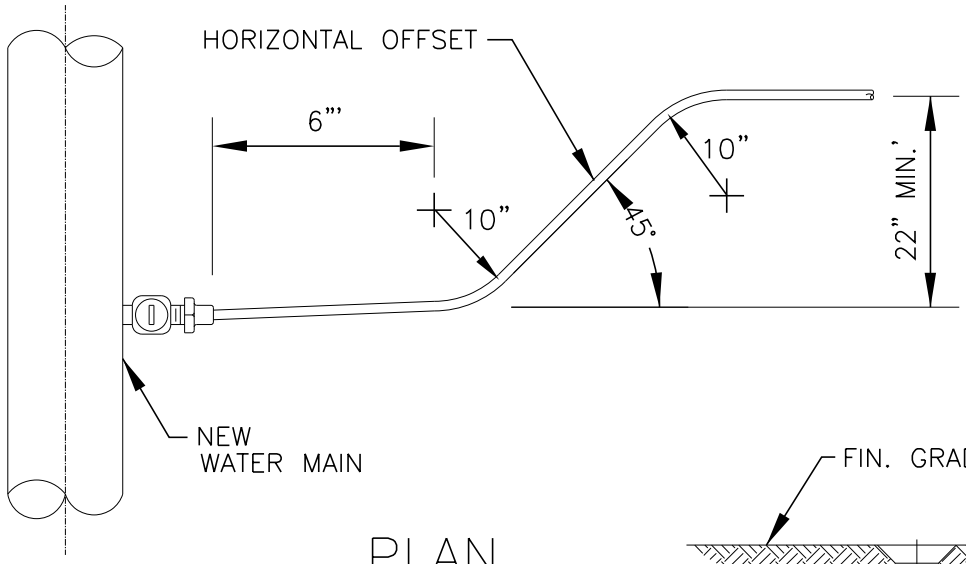

PLAN

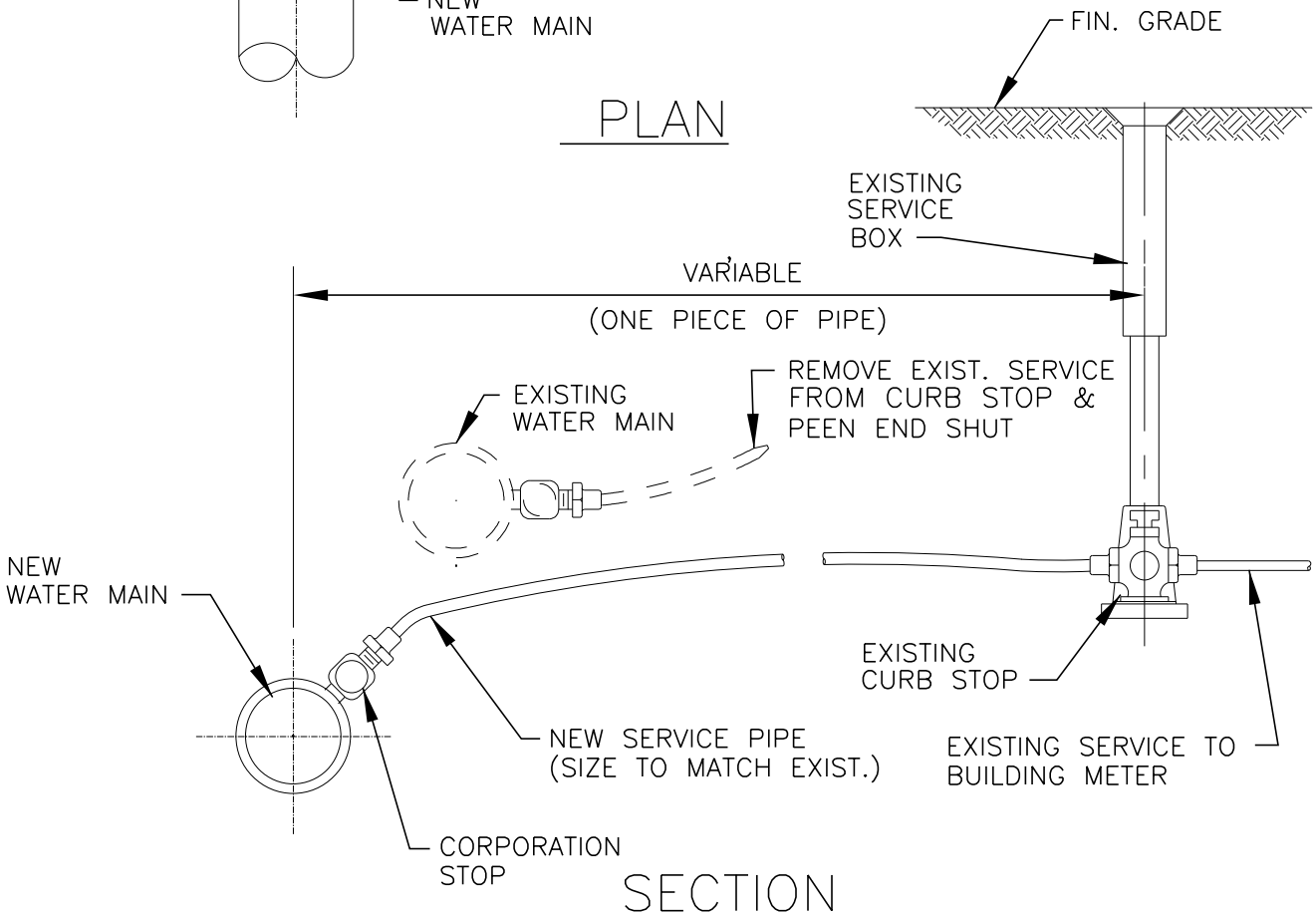

SECTION

SERVICE PIPE	CORP. STOP	CURB STOP	SERVICE BOX
3/4"	3/4"	3/4"	2 1/2"
1"	1"	1"	2 1/2"
1 1/4"	1 1/4"	1 1/4"	3"
1 1/2"	1 1/4" X 1 1/2"	1 1/2"	3"
2"	1 1/2" X 2"	2"	3"

VILLAGE OF SOUTH ELGIN

REV 01/01/14
NOT TO SCALE

EXISTING WATER SERVICE RECONNECTION DETAIL

4/30/2014 I:\Crystal Lake\SELGV\140480-VIIStd Details\CADD\Details_01_01_14.dgn